ATLAS

# MODERN PLASTIC INDUSTRY L.L.C

## Over 30 years of Excellence

### Reliability, Quality and Value

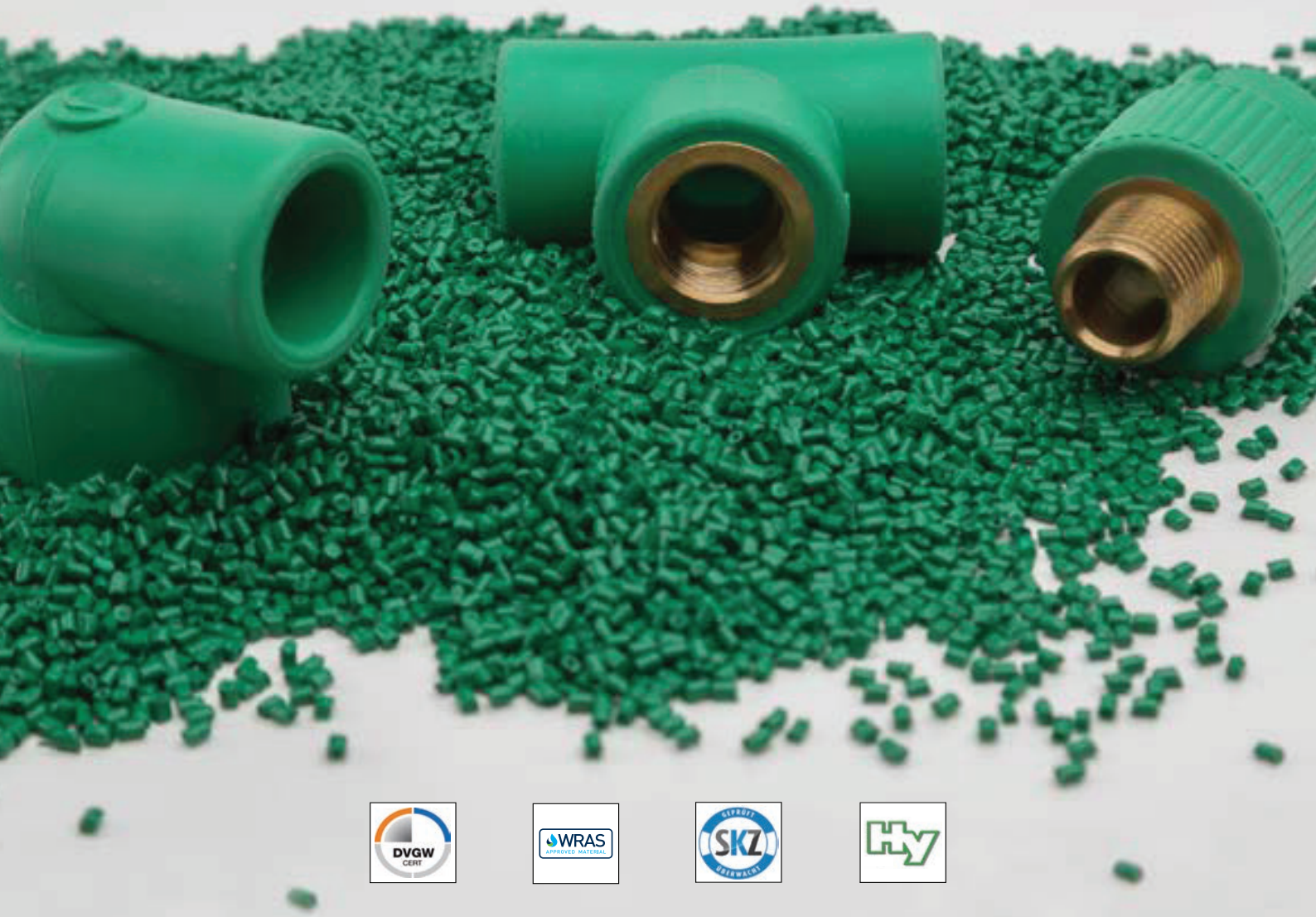

# INTRODUCTION

Modern Plastic Industry is part of Oasis Investment company, holding company of Al Shirawi Group of companies which is one of the largest and most diversified business conglomerates in the Arabian gulf.

Since its establishment in 1971, as a trading and contracting company, the group has broadened its scope to encompass a cross section of products, services and industries ranging from printing & packaging, heavy fabrication, oil & gas, engineering, electromechanical and logistics.

Established in 1987, Modern Plastic Industry LLC pioneered the manufacturing of the UPVC pipes & fittings in the United Arab Emirates. With over 30 years of experience, MPI is manufacturing a wide range of Drainage Pipes & Fittings, High Pressure Pipes & Fittings, CPVC Pipes & Fittings and PP Compression Fittings.

MPI products have been used extensively in the irrigation, construction, plumbing and landscaping industry and are playing a significant role in the development of the Gulf region and Middle East.





# TABLE OF CONTENT


OVER VIEW.....4-7

MATERIALS.....8-9

QA & QC.....10

DESIGN .....11-16

PRODUCTS .....17-35

- PP-RSTANDARDPIPES.....17-18
- PP-RFIBREPIPES.....19-20
- PP-RCT PIPES.....21-23
- PP-R FITTINGS.....24-28
- PP-RTRANSITIONFITTINGS.....29-33
- ACCESSORIES.....34-35

INSTALLATION/ASSEMBLY.....36-45

WELDING.....46-47

CHEMICAL RESISTANCES.....48-49



# OVERVIEW

## What is Water Supply Systems?

**Pipe system typically used for domestic hot & cold water supply systems such as:**

- **Drinking water-** Fresh water up to a temperature 25$^{O}$C for drinking and cooking.
- **Hot tap water**- Heated drinking water up to a temperature 60$^{O}$C.
- **Sanitary application-** Drinking water quality is not needed, like flush systems, washing & irrigation.

EN ISO 15874 standard classifies the service condition for hot and cold water applications as Class 1 (60$^{O}$C) & Class 2 (70$^{O}$C).
EN ISO 15874 standard classifies the temperatures above 70$^{O}$C as heating applications and comes under.
Class 4 (low temperature heating system) and Class 5 (High temperature heating system).

Rusting, corrosion, and scale formation are familiar problems of traditional metal piping system.

One of the important factor in the life and performance of a piping system is the material from which it is made.

An ideal material should not alter the water it is carrying.

Wrong choice of piping material may cause the failure of the installation and have a quantitative influence on the quality of water which we consume.

MPI PPR Pipe and Fittings are made from Polypropylene Random Co-Polymer (PP-R).
Polypropylene is a thermoplastic material and belongs to the polyolefin groups.
PP is a semicrystaline material.

PP's mechanical properties, chemical resistance and specially relatively high heat deflection temperature have made PP, one of the most important material used in piping industry.



# Benefits

## The Main Characteristics of MPI PPR pipe system are:

- Long service Life.
- Resistance to corrosion.
- Higher resistance to internal pressure.
- Taste and odor neutral.
- Hygienic and meets health requirements for water contact application.
- Good chemical resistance.
- Low thermal conductivity.
- Non toxic.
- Lower weight Excellent Weld-ability & Easy installation.
- Vibration and noise reduction.
- Low flow resistance.
- Higher impact strength.

.

The MPI PPR pipe system is developed and manufactured within an ISO 9001.
Quality assurance system and complies with the DIN 8077/8078 and EN ISO 15874 standards.

## Specification of raw material used in production:

- PP-R Standard Pipe, PP-R Fiber Pipe & PP-R Fittings are manufactured from Polypropylene Random Copolymer (**PPR-80**).

- **PP-RCT** Standard Pipe & Fittings are manufactured from **P**olypropylene **R**andom Copolymer with enhanced **C**rystalline structure and improved **T**emperature resistance. **(PP-R 100 / PP-R 120)**

  **Brass inserts used in transition fittings is classified as CW617N (CuZn40Pb2) and suitable for drinking water installations.**

# MPI PP-R Pipe System

## Standard Pipe

Standard Pipe is the conventional mono layer pipe as mentioned in the standards DIN 8077/8078 and EN ISO 15874.
PP-R pipe from 20 mm to 200 mm in SDR 6 & SDR 7.4
PP-RCT pipe from 20 mm to 200 mm in SDR 6 & SDR 7.4
Thermal expansion factor 0.15 mm / m.K

## Fiber Pipe

Fiber pipe is a three layer pipe of which the middle layer is reinforced with glass fiber filled PP-R material. The outer & inner layer of the pipe is of normal PP-R material.
PP-RGF/PP-RCTGF pipe from 20 mm to 200 mm inSDR 6 & SDR 7.4

## Multilayer structure gives

- Lower thermal expansion coefficient
- Higher dimensional stability
- Higher stiffness and requires less bracketing
- Thermal expansion factor 0.036 mm / m.K

## PP-R Fittings

PP-R Fitting are manufactured SDR5

## PP-RCT Fittings

PP-RCT Fitting are manufactured SDR5

- Socket Welding type
- Brass transition type
- Flanged type

Transition fittings and unions are available to connect the pipe systems of different materials together.

The male and female threaded parts are manufactured according to the well accepted standard ISO 7.

Brass inserts used in transition fittings is classified as CW617N (CuZn40Pb2) and suitable for drinking water installations.

## Installation Tools








# MPI PP-R Pipe Product Range

| Material | PP-R | PP-R | PP-R | PP-R | PP-RCT | PP-RCT | PP-RCT | PP-RCT |
|---|---|---|---|---|---|---|---|---|
| Pipe type | Standard | Standard | Fiber | Fiber | Standard | Standard | Fiber | Fiber |
| SDR | 6 | 7.4 | 6 | 7.4 | 9 | 11 | 9 | 11 |
| Pressure range | (PN20) | (PN16) | (PN 25) | (PN20) | (PN16) | (PN10) | (PN16) | (PN10) |
| 20 | * | * | * | * | * | | * | |
| 25 | * | * | * | * | * | | * | |
| 32 | * | * | * | * | * | | * | |
| 40 | * | * | * | * | * | | * | |
| 50 | * | * | * | * | * | | * | |
| 63 | * | * | * | * | * | | * | |
| 75 | * | * | * | * | * | | * | |
| 90 | * | * | * | * | * | | * | |
| 110 | * | * | * | * | * | | * | |
| 125 | * | * | * | * | | | | |
| 160 | * | * | * | * | | * | | * |
| 200 | * | * | * | * | | | | |

| ISO 15874, Maximum Operating Pressure MOP | | | | | | | | | |
|---|---|---|---|---|---|---|---|---|---|
| Class | 1 | 10 | 8 | 10 | 8 | 8 | 6 | 8 | 6 |
| Class | 2 | 8 | 6 | 8 | 6 | 8 | 6 | 8 | 6 |
| Class | 4 | 10 | 10 | 10 | 10 | 8 | 6 | 8 | 6 |
| Class | 5 | 6 | 6 | 6 | 6 | 6 | 4 | 6 | 4 |

Class 1 hot water supply 60 °C
Class 2 hot water supply 70 °C
Class 4 low temperature heating 60 °C
Class 5 High temperature heating 80 °C

| DIN 8077 , Maximum Operating Pressure MOP | | | | | | | | |
|---|---|---|---|---|---|---|---|---|
| SF 1.5 – 20 °C | 25.7 | 20.4 | 25.7 | 20.4 | 19.3 | 15.3 | 19.3 | 15.3 |
| SF 1.5 – 60 °C | 12.7 | 10.1 | 12.7 | 10.1 | 10.2 | | 10.2 | |
| SF 1.5 – 70 °C | 8.5 | 6.7 | 8.5 | 6.7 | 8.5 | 6.8 | 8.5 | 6.8 |
| SF 1.25 – 20 °C | 30.9 | 24.5 | 30.9 | 24.5 | | | | |
| SF 1.25 – 60 °C | 15.3 | 12.1 | 15.3 | 12.1 | | | | |
| SF 1.25 – 70 °C | 10.2 | 8.1 | 10.2 | 8.1 | | | | |
| PN* | 20 | 16 | 20 | 16 | 16 | 10 | 16 | 10 |

SF = Safety (Design) Factor – Permanent temperature for 50 years Design Life Span
* PN = Pressure Nominal based on DIN 8077 – 50 years at 20 °C.



# MATERIALS

## MPI (PP-R).

Polypropylene Random Copolymer (PP-R) exibits excellent combination of mechanical, thermal and chemical properties.

PPR is ideal choice for the potable water application.

MPI PPR pipe systems are designed to withstand constant temperatures up to 70 o C with a minimum service life of 50 years.

Temperature rise up to 100 $^{\circ}$ C for short time duration is acceptable.

Pipes of PP-R material shows pressure resistance, according to ISO/TR 9080 with a proven Minimum Required Strength (MRS) of 8 M Pa and Categorized Required Strength (CRS) of 3.2 M Pa.

## Table A: Physical Properties of PP R Material

| Property | | Test Method | Unit | Value |
|---|---|---|---|---|
| Density | | ASTM D 792 / ISO 1183 | g/cm$^3$ | 0.905 |
| Melt Flow Rate | 230° C, 2.16 kg | ASTM D 1238 / ISO 1133 | G/10 min | 0.3 |
| | 190° C, 5.0 kg | | | 0.45 |
| Tensile Strength | Yeild point | ASTM D 638 / ISO 527 | Mpa | 25 |
| | Break Point | | | 23 |
| Elongation at yeild | | ASTM D 638 / ISO 527 | % | 13.5 |
| Flexural Modulus | | ASTM D 790 / ISO 178 | Mpa | 850 |
| Charpy Impact Strength (notched) | 23° C | ISO 179 | KJ/m$^2$ | 50 |
| | 0° C | | | 5 |
| Vicat Softening Point | | ASTM D 1525 | °C | 130 |
| Coefficient of thermal expansion (0° C / 70° C) | | DIN 53752 | k$^{-1}$ | 0.15 |

The data of table are relative and represents empirical values obtained in various tests



## MPI (PP-RCT).

PP-RCT - Polyproylene Random Crystallinity Temperature.
Polypropylene random coploymer with special crystallinity by special "β nucleation" process providing an improved pressure resistance, especially at elevated temperatures.

- Special crystallinity structre – high degree of the hexagonal for ( β form).
- Improvement in long term strength 50 % than regular PP-R.
- Improved impact strength.
- Improved resistance to crack propagation.
- Lower wall thickness and higher hydraulic capacity.

Pipes of PP-RCT material shows pressure resistance, according to ISO/TR 9080 with a proven Minimum Required Strength (MRS) of 11.5 M Pa and Categorized Required Strength (CRS) of 5 M Pa.

## Table B: Physical Properties of PP-RCT Material

| Property | | Test Method | Unit | Value |
|---|---|---|---|---|
| Density | | ISO 1183 | g/cm$^3$ | 0.905 |
| Melt Flow Rate | 230° C, 2.16 kg | ISO 1133 | G/10 min | 0.25 |
| | 190° C, 5.0 kg | | | 0.45 |
| Tensile Strength | Yeild point | ISO 527 | Mpa | 25 |
| Elongation at yeild | | ISO 527 | % | 10 |
| Flexural Modulus | | ISO 527 | Mpa | 900 |
| Charpy Impact Strength (notched) | 23° C | ISO 179 | KJ/m$^2$ | 40 |
| | 0° C | | | 4 |
| Coefficient of thermal expansion (0° C / 70° C) | | DIN 53752 | K$^{-1}$ | 0.15 |

The data of table are relative and represents empirical values obtained in various tests

## PP-RCT Advantages

- The improved long-term strength of PP-RCT material leads to a more economic set of dimensions of the pipe system.
- It enables designers to select thinner wall pipes and in some sitiuations also smaller diameter pipe can be used.
- This results in higher hydraulic pipe capacity or the possibility to apply higher pressure than with standard PP-R.

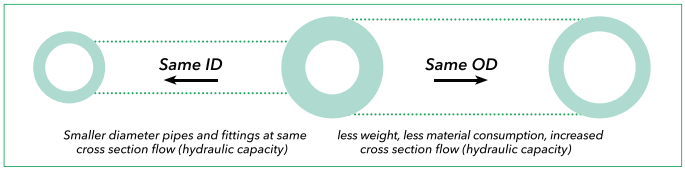



# MPI QUALITY ASSURANCE

Quality is at the root of all good business, it reinforces a strong brand in the marketplace, encourages customer loyalty, and ensures the viability of a business.
Continuous improvement is essential to maintain the quality of business processes and practices.
At Modern Plastic Industry, we understand quality management from planning, control and assurance through to quality improvement. We believe that quality management is much more than product or service quality, but about how to achieve quality, maintain and improve it. Quality management systems are important for all businesses, whatever their size or complexity.

## State of Art of Machinery

European state of art machinery with latest modern technologies ensures the demanded quality.

## Incoming Material Inspection

Approved quality raw material is used for the manufacturing the PP-RCT pipe system.
The incoming raw material quality is ensured by the inspection and testing.

## Production Monitoring

The process control set up will ensure the dimensional correctness of the items produced.
Consistent product quality is maintained by standard data of the injection molding machines, extrusion and compared with the specification.
Regular online checking of production runs are carried out.

## Quality Control & Final Inspection

Continuous in-process inspection are carried out to monitor the process in regular intervals.
The following tests are conducted and the goods are released to the warehouse after final inspection.

- Visual appearance and surface finish.
- Dimensional accuracy.
- Internal Pressure test.
- Impact test.
- Heat Reversion test.

## Standards & Certifcates

| | |
|---|---|
| DIN 8076 | Standard for testing metal threaded joints. |
| DIN 8077 | Polypropylene (PP) pipe dimensions. |
| DIN 8078 | Polypropylene (PP) pipes – PP-H, PP-B, PP-R, PP-RCT – General quality requirements. |
| EN ISO 15874 | Plastics Piping Systems for hot and cold water installations – Polypropylene (PP). |
| DIN 16962 | Pipe joint assemblies and fittings Polypropylene (PP). |
| DIN 2999 | Standards for fittings with threaded metallic inserts. |
| DIN 4109 | Noise control in buildings. |
| DIN 4140 | Insulation of service installations. |
| DVS 2207 | Welding of thermoplastic pipes and fittings. |
| DVGW W544 | General Requirements and Testing of Plastics Pipes. |
| SKZ HR 3.10 | Specification for test & inspection Pressure Piping Systems (PP). |
| ISO 9001-2015 | Quality Management System. |



# DESIGN OF PP-R PIPE SYSTEM

## Polypropylene Material

Polypropylene is a thermoplastic material and belongs to the polyolefin groups.
PP is a semi-crystaline material.PP's mechanical properties, chemical resistance and specially relatively high heat deflection temperature have made PP, one of the most important material used in piping industry.

PP is the polymer of propylene (C3H6), which is produced by Ziegler-Natta catalysts.
The main four types of Polypropylene are:

- 1. Polypropylene Homo Polymer (PP-H) (Type 1)
- 2. Poypropylene Block Co-Polymer (PP-B) (Type 2)
- 3. Polypropylene Random Co-Polymer (PP-R) (Type 3)
- 4. Polypropylene Random Crystalline Elevated Temperature (PP-RCT)

PP-H – High Internal Pressure Resistance – Preferred in Industrial application.
PP-B – High impact strength especially at low temperatures & low thermal endurance – Sewage Pipe System.
PP-R – High Internal Pressure Resistance at high temperature & low e-modulus – Plumbing and Sanitary application.
PP-RCT – High Internal Pressure Resistance at Elevated temperature – Hot water & Heating System.

## Relationship between older PN pressure class marking, Series S & SDR

## Pipe Series – S

Dimensionless number related to the nominal outside diameter of a pipe and its wall thickness.
On the basis of this number, the wall thickness (s) is to be calculated as follows:

$$s = \frac{d}{2s + 1}$$

**PN** Nominal Pressure
**S** Pipe Series
**SDR** Standard Dimension Ratio
**d** External diameter of pipe
**S** Wall thickness of pipe

$$SDR = 2S + 1 = d/s$$

| Pipe Series (S) | | | | | | | |
|---|---|---|---|---|---|---|---|
| 20 | 26 | 12.5 | 8.3 | 5 | 3.2 | 2.5 | 2 |

| PN | S | SDR |
|---|---|---|
| 10 | 5 | 11 |
| 12.5 | 4 | 9 |
| 16 | 3.2 | 7.4 |
| 20 | 2.5 | 6 |
| 25 | 2 | 5 |

For standard PP-R Raw Material Only.

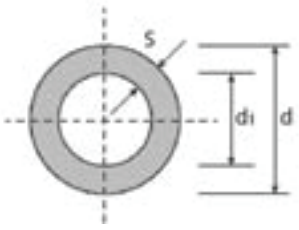

# Long Term Material Strength

One of the most important properties of a polymer material used for hot and cold water pressure pipe is its resistance to internal pressure at different temperatures.
Also creep behavior is an important factor to take consideration for plastic pipe systems.

## Design stress details for PP-R and PP-RCT

| Application class | Design Stress for PP-R | | Design Stress for PP-RCT | |
|---|---|---|---|---|
| | M Pa | Bar | M Pa | Bar |
| 1 | 3.09 | 30.9 | 3.63 | 36.3 |
| 2 | 2.13 | 21.3 | 3.40 | 34.0 |
| 4 | 3.30 | 33.0 | 3.67 | 36.7 |
| 5 | 1.90 | 19.0 | 2.92 | 29.2 |
| 20°C / 50 years | 6.93 | 69.3 | 8.24 | 82.4 |

## Safety factor & Design Stress

| Temperature | SF | |
|---|---|---|
| °C | PP-R | PP-RCT |
| $T_d$ | 1.5 | 1.5 |
| $T_{max}$ | 1.3 | 1.3 |
| $T_{mal}$ | 1.0 | 1.0 |
| $T_{Cold}$ | 1.4 | 1.4 |

$T_D$ = Design Temperature
$T_{max}$ =Maximum Temperature
$T_{mal}$ =Failure Temperature
$T_{Cold}$ =Cold water

## Safety factor & Design Stress

| Temperature | | Time (years) | Required Long term strength PP-R | | Required Long term strength PP-RCT | |
|---|---|---|---|---|---|---|
| | | | M Pa | Bar | M Pa | Bar |
| 20°C | 68°F | 50 | 9.7 | 97 | 11.5 | 115 |
| 60°C | 140°F | 50 | 4.9 | 49 | 6.1 | 61 |
| 70°C | 158°F | 50 | 3.2 | 32 | 5.1 | 51 |
| 95°C | 203°F | 5 | 1.9 | 19 | 3.3 | 33 |
| 110°C | 230°F | 1 | 1.9 | 19 | 2.6 | 26 |



## Reference Characteristic curves of the long-term hydrostatic strength for **PP-R** Pipe

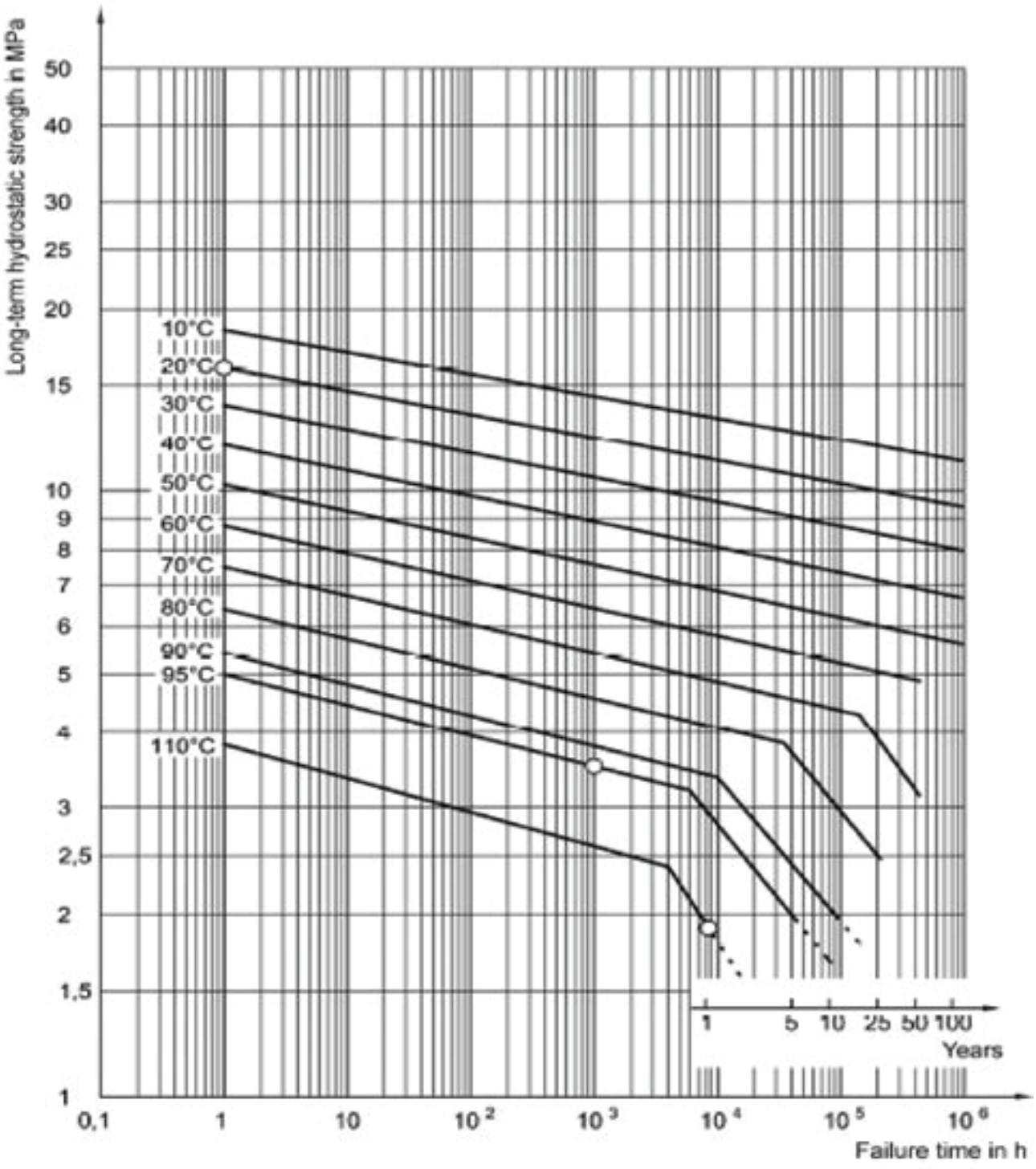


Pipes of PP-R material shows pressure resistance, according to ISO/TR 9080 with a proven Minimum Required Strength (MRS) of **8 MPa** and Categorized Required Strength (CRS) of **3.2 MPa**.

## Reference Characteristic curves of the long-term hydrostatic strength for **PP-RCT** Pipe

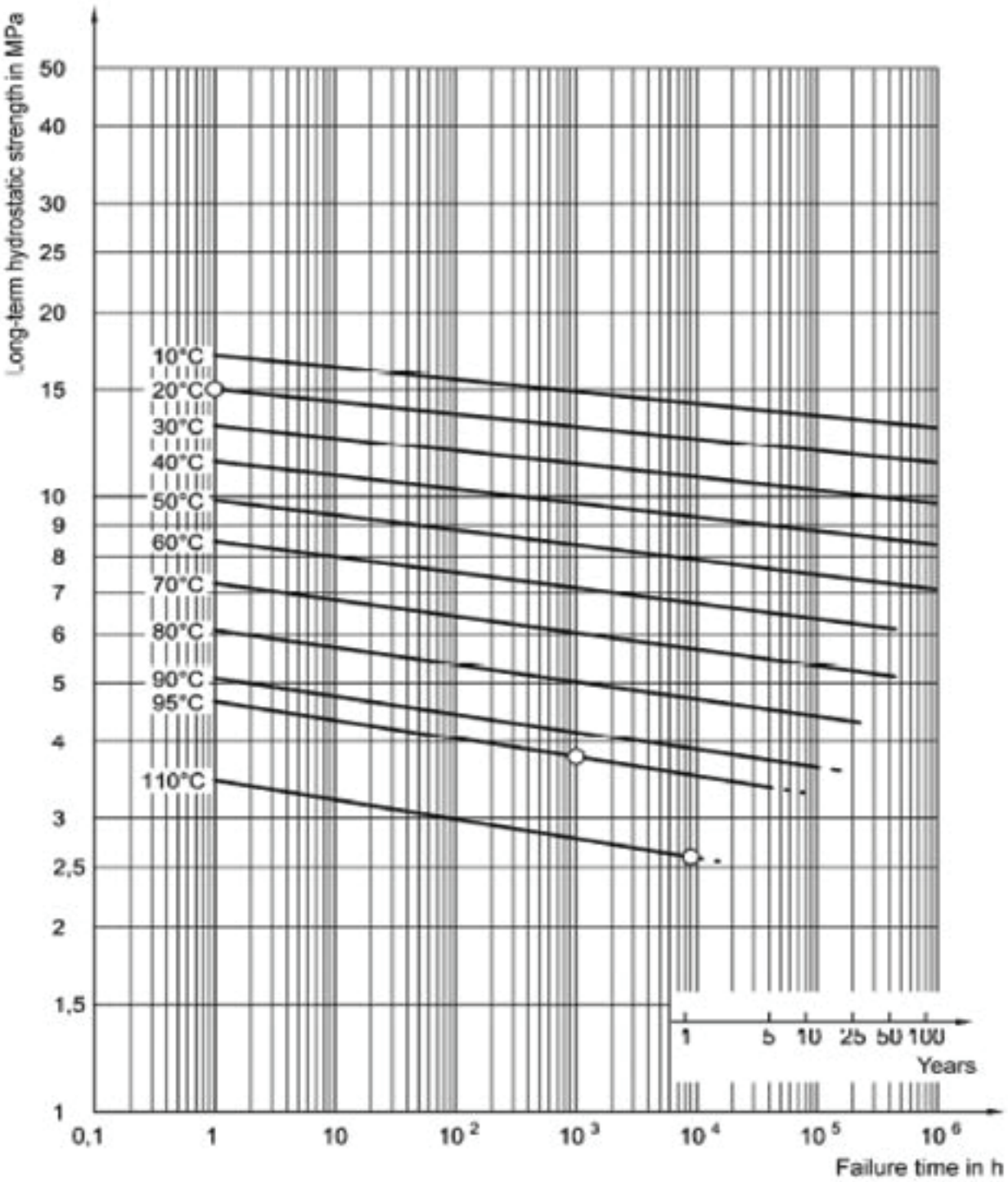


Pipes of PP-RCT material shows pressure resistance, according to ISO/TR 9080 with a proven Minimum Required Strength (MRS) of **11.5 MPa** and Categorized Required Strength (CRS) of **5 MPa.**



# Design of PP-R Pipe System

## Recommended Pipe SDR for PP-R and PP-RCT for application Class 1 (hot water supply 60°C) & Class 2 (hot water supply 70°C)

| Operating Pressure | Class 1 (60°C) | | Class 2 (70°C) | |
|---|---|---|---|---|
| | PP-R | PP-RCT | PP-R | PP-RCT |
| 4 bar | SDR 11 | SDR 13.6 | SDR 11 | SDR 13.6 |
| 6 bar | SDR 11 | SDR 11 | SDR 7.4 | SDR 11 |
| 8 bar | SDR 7.4 | SDR 9 | SDR 6 | SDR 9 |
| 10 bar | SDR 6 | SDR 7.4 | SDR 5 | SDR 7.4 |

## Recommended Pipe SDR for PP-R and PP-RCT for application Class 4 (under floor heating & low temperature radiators) & Class 5 (high temperature radiators)

| Operating Pressure | Class 4 | | Class 5 | |
|---|---|---|---|---|
| | PP-R | PP-RCT | PP-R | PP-RCT |
| 4 bar | SDR 11 | SDR 13.6 | SDR 7.4 | SDR 13.6 |
| 6 bar | SDR 11 | SDR 11 | SDR 7.4 | SDR 9 |
| 8 bar | SDR 7.4 | SDR 9 | SDR 5 | SDR 7.4 |
| 10 bar | SDR 6 | SDR 7.4 | - | SDR 6 |

## Table C – Classification of Service Conditions (EN ISO 15874-1: 2003)

| Application Class | Design Temperature $T_D$ | Operation Time $T_{ope.}$ at TD | $T_{max}$ | Time at $T_{max}$ | $T_{mal}$ | Time at $T_{mal}$ | Typical field of application |
|---|---|---|---|---|---|---|---|
| | °C | Years | °C | Years | °C | h | |
| 1 | 60 | 49 | 80 | 1 | 95 | 100 | Hot Water Supply (60° C) |
| 2 | 70 | 49 | 80 | 1 | 95 | 100 | Hot Water Supply (70° C) |
| 4 | 20 | 2.5 | 70 | 2.5 | 100 | 100 | Underfloor heating and low temperature radiators |
| | 40 | 20 | | | | | |
| | 60 | 25 | | | | | |
| 5 | 20 | 14 | 90 | 1 | 100 | 100 | High temperature rediators |
| | 60 | 25 | | | | | |
| | 80 | 10 | | | | | |
| | 20 | 50 | - | - | - | - | Cold Water Supply |

$T_D$ = Design Temperature
$T_{max}$ =Maximum Temperature
$T_{mal}$ =Failure Temperature

For application class with more than one operating temperature, the corresponding time of operation needs to be added.

**For example:**
the collective temperatures of the 50 years service life time of application class 4 is calculated as,
20°C over 2.5 years followed by
40°C over 20 years followed by
60°C over 25 years followed by
70°C over 2.5 years followed by
100°C over 100 hours

## Table D: Allowable Working Pressure with Safety Factor 1.25 (for potable water)

| Temperature in ° C | Years of Service | MPI PP-R Standard Pipe MPI PPR Fiber Pipe SDR 6 | MPI PP-R Standard Pipe MPI PPR Fiber Pipe SDR 7.4 | Application |
|---|---|---|---|---|
| 10 | 1 | 42 | 33.4 | Cold Water |
| | 5 | 39.8 | 31.6 | |
| | 10 | 38.5 | 30.6 | |
| | 25 | 37.3 | 29.6 | |
| | 50 | 36.3 | 28.8 | |
| | 100 | 35.4 | 28.1 | |
| 20 | 1 | 36 | 28.6 | |
| | 5 | 33.8 | 26.8 | |
| | 10 | 32.8 | 26.1 | |
| | 25 | 31.8 | 25.3 | |
| | 50 | 30.9 | 24.5 | |
| | 100 | 29.9 | 23.8 | |
| 30 | 1 | 30.6 | 24.3 | Cold & Warm Water |
| | 5 | 28.7 | 22.8 | |
| | 10 | 27 | .7 22 | |
| | 25 | 26.8 | 21.3 | |
| | 50 | 26.1 | 20.7 | |
| | 100 | 25.5 | 20.2 | |
| 40 | 1 | 25.8 | 20.5 | |
| | 5 | 24.2 | 19.2 | |
| | 10 | 23.6 | 18.7 | |
| | 25 | 22.6 | 18 | |
| | 50 | 22 | 17.5 | |
| | 100 | 21.3 | 16.9 | |
| 50 | 1 | 22 | 17.5 | |
| | 5 | 20.4 | 16.2 | |
| | 10 | 19.7 | 15.7 | |
| | 25 | 19.1 | 15.2 | |
| | 50 | 18.5 | 14.7 | |
| | 100 | 17.8 | 14.2 | |
| 60 | 1 | 18.5 | 14.7 | |
| | 5 | 17.2 | 13.7 | |
| | 10 | 16.6 | 13.2 | |
| | 25 | 15.9 | 12.6 | |
| | 50 | 15.3 | 12.1 | |
| 70 | 1 | 15.6 | 12.4 | Hot Water |
| | 5 | 14.3 | 11.4 | |
| | 10 | 14 | 11.1 | |
| | 25 | 12.1 | 9.6 | |
| | 50 | 10.2 | 8.1 | |
| 80 | 1 | 13.1 | 10.4 | |
| | 5 | 11.5 | 9.1 | |
| | 10 | 9.6 | 7.6 | |
| | 25 | 7.6 | 61 | |
| 90 | 1 | 9.2 | 7.3 | |
| | 5 | 6.1 | 4.8 | |
| | 10 | 5.1 | 4 | |



## Table D: Allowable Working Pressure with Safety Factor 1.25 PP-RCT (For potable water)

| Temperature in ° C | Years of Service | MPI PP-RCT PIPE<br>MPI PP-RCTGF PIPE<br>SDR 6 | MPI PP-RCT PIPE<br>MPI PP-RCTGF PIPE<br>SDR 7.4 | Application |
|---|---|---|---|---|
| 10 | 1 | 45.6 | 36.2 | Cold Water |
| | 5 | 44.2 | 35.1 | |
| | 10 | 43.7 | 34.7 | |
| | 25 | 42.9 | 34.1 | |
| | 50 | 42.3 | 33.6 | |
| | 100 | 41.8 | 33.2 | |
| 20 | 1 | 39.7 | 31.5 | |
| | 5 | 38.5 | 30.5 | |
| | 10 | 37.9 | 30.1 | |
| | 25 | 37.2 | 29.6 | |
| | 50 | 36.7 | 29.2 | |
| | 100 | 36.2 | 28.8 | |
| 30 | 1 | 34.4 | 27.3 | Cold & Warm Water |
| | 5 | 33.2 | 26.4 | |
| | 10 | 32.7 | 26.0 | |
| | 25 | 32.1 | 25.5 | |
| | 50 | 31.6 | 25.1 | |
| | 100 | 31.2 | 24.8 | |
| 40 | 1 | 29.6 | 23.5 | |
| | 5 | 28.5 | 22.6 | |
| | 10 | 28.1 | 22.3 | |
| | 25 | 27.5 | 21.8 | |
| | 50 | 27.1 | 21.5 | |
| | 100 | 26.7 | 21.2 | |
| 50 | 1 | 25.3 | 20.1 | |
| | 5 | 24.3 | 19.3 | |
| | 10 | 23.9 | 19 | |
| | 25 | 23.4 | 18.6 | |
| | 50 | 23 | 18.3 | |
| | 100 | 22.6 | 18 | |
| 60 | 1 | 21.4 | 17 | |
| | 5 | 20.6 | 16.3 | |
| | 10 | 20.2 | 16 | |
| | 25 | 19.8 | 15.7 | |
| | 50 | 19.4 | 15.4 | |
| 70 | 1 | 18 | 14.3 | Hot Water |
| | 5 | 17.3 | 13.7 | |
| | 10 | 16.9 | 13.5 | |
| | 25 | 16.5 | 13.1 | |
| | 50 | 16.2 | 12.9 | |
| 80 | 1 | 15 | 11.9 | |
| | 5 | 14.4 | 11.4 | |
| | 10 | 14.1 | 11.2 | |
| | 25 | 13.7 | 10.9 | |
| 90 | 1 | 11.2 | 8.9 | |
| | 5 | 10.7 | 8.5 | |
| | 10 | 10.5 | 8.3 | |

# PRODUCTS RANGE - PIPES

## PP-R Standard Pipe

| | |
|---|---|
| Standard dimension ratio | SDR:6 |
| Pipe Structure | Single |
| Pipe Series | 2.5 (PN 20) |
| Standard | DIN 8077/8078 / EN ISO 15874-2 |
| Standard Color | Green |
| Standard Pipe Length | 4 meters |

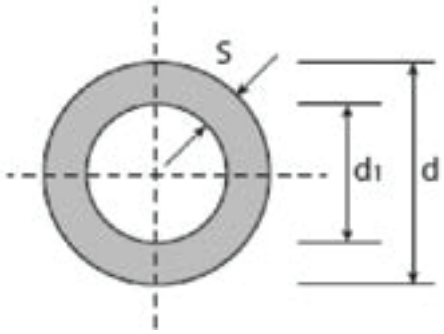


## Application




Potable water
Plumbing
Heating and cooling
Swimming pool
Chemical transport
Under floor heating and low temperature radiators

**Service condition classification – Application class 2 (70°C) - see table C**

**Life expectancy depends on the operation temperature.**
**Permissible operating pressures in bar- See table D**

| Product Code | Size | Packing unit | Outer Diameter (d) | Wall Thickness (s) | Inner Diameter (d1) | Water Content l/m |
|---|---|---|---|---|---|---|
| | mm | Nos. | mm | mm | mm | l/m |
| A20X3.4 SD6 | 20 x 3.4 | 25 | 20 | 3.4 | 13.2 | 0.137 |
| A25X4.2 SD6 | 25 x 4.2 | 25 | 25 | 4.2 | 16.6 | 0.216 |
| A32X5.4 SD6 | 32 x 5.4 | 10 | 32 | 5.4 | 21.2 | 0.353 |
| A40X6.7 SD6 | 40 x 6.7 | 10 | 40 | 6.7 | 26.6 | 0.555 |
| A50X8.3 SD6 | 50 x 8.3 | 5 | 50 | 8.3 | 33.4 | 0.876 |
| A63X10.5 SD6 | 63 x 10.5 | 5 | 63 | 10.5 | 42.0 | 1.385 |
| A75X12.5 SD6 | 75 x 12.5 | 5 | 75 | 12.5 | 50.0 | 1.963 |
| A90X15.0 SD6 | 90 x 15.0 | 3 | 90 | 15 | 60.0 | 2.826 |
| A110X18.3 SD6 | 110 x 18.3 | 2 | 110 | 18.3 | 73.4 | 4.229 |
| A125X20.8 SD6 | 125 x 20.8 | 1 | 125 | 20.8 | 83.4 | - |
| A160X26.6 SD6 | 160 x 26.6 | 1 | 160 | 26.6 | 106.8 | 8.954 |
| A200X33.2 SD6 | 200 x 33.2 | 1 | 200 | 33.2 | 133.6 | - |

- 20°C / 20 Bar & 70°C / 10 Bar



# PP-RCT Standard Pipe

| | |
|---|---|
| Standard dimension ratio | SDR:6 |
| Pipe Structure | Single |
| Pipe Series | 2.5 (PN 25) |
| Standard | DIN 8077/8078 / EN ISO 15874-2 |
| Standard Color | Green |
| Standard Pipe Length | 4 meters |

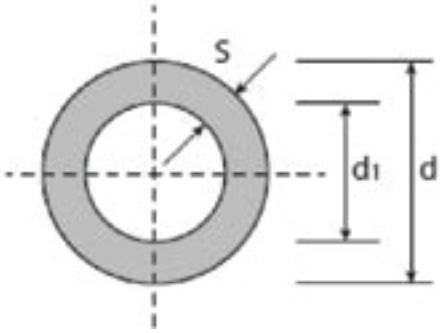


## Application




Potable water
Plumbing
Heating and cooling
Swimming pool
Chemical transport
Under floor heating and low temperature radiators

**Service condition classification – Application class 2 (70°C) - see table C**

**Life expectancy depends on the operation temperature.**
**Permissible operating pressures in bar- See table D**

| Product Code | Size | Packing unit | Outer Diameter (d) | Wall Thickness (s) | Inner Diameter (d1) | Water Content l/m |
|---|---|---|---|---|---|---|
| | mm | Nos. | mm | mm | mm | l/m |
| ACT 20X3.4 SD6 | 20 x 3.4 | 25 | 20 | 3.4 | 13.2 | 0.137 |
| ACT 25X4.2 SD6 | 25 x 4.2 | 25 | 25 | 4.2 | 16.6 | 0.216 |
| ACT 32X5.4 SD6 | 32 x 5.4 | 10 | 32 | 5.4 | 21.2 | 0.353 |
| ACT 40X6.7 SD6 | 40 x 6.7 | 10 | 40 | 6.7 | 26.6 | 0.555 |
| ACT 50X8.3 SD6 | 50 x 8.3 | 5 | 50 | 8.3 | 33.4 | 0.876 |
| ACT 63X10.5 SD6 | 63 x 10.5 | 5 | 63 | 10.5 | 42.0 | 1.385 |
| ACT 75X12.5 SD6 | 75 x 12.5 | 5 | 75 | 12.5 | 50.0 | 1.963 |
| ACT 90X15.0 SD6 | 90 x 15.0 | 3 | 90 | 15 | 60.0 | 2.826 |
| ACT 110X18.3 SD6 | 110 x 18.3 | 2 | 110 | 18.3 | 73.4 | 4.229 |
| ACT 125X20.8 SD6 | 125X20.8 | 1 | 125 | 20.8 | 83.4 | - |
| ACT 160X26.6 SD6 | 160 x 26.6 | 1 | 160 | 26.6 | 106.8 | 8.954 |
| ACT 200X33.2 SD6 | 200 x 33.2 | 1 | 200 | 33.2 | 133.6 | - |

- 20°C / 20 Bar & 70°C / 10 Bar

# PP-R Standard Pipe

| | |
|---|---|
| Standard dimension ratio | SDR:7.4 |
| Pipe Structure | Single |
| Pipe Series | 3.2 (PN 16) |
| Standard | DIN 8077/8078 / EN ISO 15874-2 |
| Standard Color | Green |
| Standard Pipe Length | 4 meters |

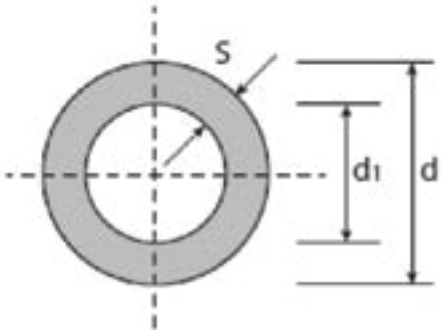


## Application




Potable water
Plumbing
Heating and cooling
Swimming pool
Chemical transport
Under floor heating and low temperature radiators

**Service condition classification – Application class 1 (60°C) - see table C**

**Life expectancy depends on the operation temperature.**
**Permissible operating pressures in bar- See table D**

| Product Code | Size | Packing unit | Outer Diameter (d) | Wall Thickness (s) | Inner Diameter (d1) | Water Content l/m |
|---|---|---|---|---|---|---|
| | mm | Nos. | mm | mm | mm | l/m |
| A20X2.8 SD7.4 | 20 x 2.8 | 25 | 20 | 2.8 | 14.4 | 0.163 |
| A25X3.5 SD7.4 | 25 x 3.5 | 25 | 25 | 3.5 | 18.0 | 0.254 |
| A32X4.4 SD7.4 | 32 x 4.4 | 10 | 32 | 4.4 | 23.2 | 0.423 |
| A40X5.5 SD7.4 | 40 x 5.5 | 10 | 40 | 5.5 | 29.0 | 0.660 |
| A50X6.9 SD7.4 | 50 x 6.9 | 5 | 50 | 6.9 | 36.2 | 1.029 |
| A63X8.6 SD7.4 | 63 x 8.6 | 5 | 63 | 8.6 | 45.8 | 1.647 |
| A75X10.3 SD7.4 | 75 x 10.3 | 5 | 75 | 10.3 | 54.4 | 2.323 |
| A90X12.3 SD7.4 | 90 x 12.3 | 3 | 90 | 12.3 | 65.4 | 3.358 |
| A110X15.1 SD7.4 | 110 x 15.1 | 2 | 110 | 15.1 | 79.8 | 4.999 |
| A125X17.1 SD7.4 | 125 x 17.1 | 1 | 125 | 17.1 | 90.8 | - |
| A160X21.9 SD7.4 | 160 x 21.9 | 1 | 160 | 21.9 | 116.2 | 10.599 |
| A200X27.4 SD7.4 | 200 x 27.4 | 1 | 200 | 27.4 | 145.2 | - |

- 20°C / 16 Bar & 70°C / 8 Bar



# PP-R Fiber Pipe – Glass Fiber Reinforced Pipes

| | |
|---|---|
| Standard dimension ratio | SDR:6 |
| Pipe Structure | 3 layer |
| Pipe Series | 2.5 (PN 25) |
| Standard | DIN 8077/8078 / EN ISO 15874-2 |
| Standard Color | Green |
| Standard Pipe Length | 4 meters |

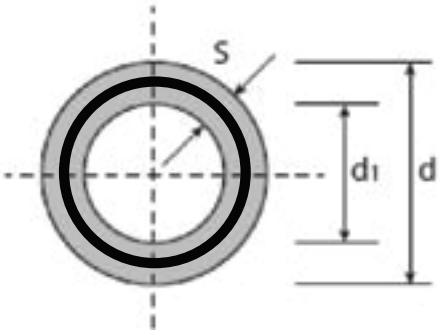


## Application

Potable water
Plumbing
Heating and cooling
Swimming pool
Chemical transport
Under floor heating and low temperature radiators




**Service condition classification – Application class 2 (70°C) - see table C**

**Life expectancy depends on the operation temperature.**
**Permissible operating pressures in bar- See table D**

Multilayer pipe with glass fiber reinforced mid layer for indoor and outdoor cold, hot water supply and central heating systems.

| Product Code | Size | Packing unit | Outer Diameter (d) | Wall Thickness (s) | Inner Diameter (d1) | Water Content l/m |
|---|---|---|---|---|---|---|
| | mm | Nos. | mm | mm | mm | l/m |
| AGF20X3.4 SD6 | 20 x 3.4 | 25 | 20 | 3.4 | 13.2 | 0.137 |
| AGF25X4.2 SD6 | 25 x 4.2 | 25 | 25 | 4.2 | 16.6 | 0.216 |
| AGF32X5.4 SD6 | 32 x 5.4 | 10 | 32 | 5.4 | 21.2 | 0.353 |
| AGF40X6.7 SD6 | 40 x 6.7 | 10 | 40 | 6.7 | 26.6 | 0.555 |
| AGF50X8.3 SD6 | 50 x 8.3 | 5 | 50 | 8.3 | 33.4 | 0.876 |
| AGF63X10.5 SD6 | 63 x 10.5 | 5 | 63 | 10.5 | 42.0 | 1.385 |
| AGF75X12.5 SD6 | 75 x 12.5 | 5 | 75 | 12.5 | 50.0 | 1.963 |
| AGF90X15.0 SD6 | 90 x 15.0 | 3 | 90 | 15 | 60.0 | 2.826 |
| AGF110X18.3 SD6 | 110 x 18.3 | 2 | 110 | 18.3 | 73.4 | 4.229 |
| AGF125X20.8 SD6 | 125 x 20.8 | 1 | 125 | 20.8 | 83.4 | - |
| AGF160X26.6 SD6 | 160 x 26.6 | 1 | 160 | 26.6 | 106.8 | 8.954 |
| AGF200X33.2 SD6 | 200 x 33.2 | 1 | 200 | 33.2 | 133.6 | - |

- 20°C / 20 Bar & 70°C / 10 Bar

# PP-RCT Fiber Pipe – Glass Fiber Reinforced Pipes

| | |
|---|---|
| Standard dimension ratio | SDR:6 |
| Pipe Structure | 3 layer |
| Pipe Series | 2.5 (PN 25) |
| Standard | DIN 8077/8078 / EN ISO 15874-2 |
| Standard Color | Green |
| Standard Pipe Length | 4 meters |

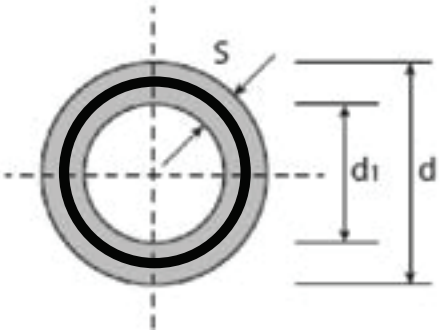


## Application

Potable water
Plumbing
Heating and cooling
Swimming pool
Chemical transport
Under floor heating and low temperature radiators




**Service condition classification – Application class 2 (70°C) - see table C**

**Life expectancy depends on the operation temperature.**
**Permissible operating pressures in bar- See table D**

Multilayer pipe with glass fiber reinforced mid layer for indoor and outdoor cold, hot water supply and central heating systems.

| Product Code | Size | Packing unit | Outer Diameter (d) | Wall Thickness (s) | Inner Diameter (d1) | Water Content l/m |
|---|---|---|---|---|---|---|
| | mm | Nos. | mm | mm | mm | l/m |
| ACTGF20X3.4 SD6 | 20 x 3.4 | 25 | 20 | 3.4 | 13.2 | 0.137 |
| ACTGF25X4.2 SD6 | 25 x 4.2 | 25 | 25 | 4.2 | 16.6 | 0.216 |
| ACTGF32X5.4 SD6 | 32 x 5.4 | 10 | 32 | 5.4 | 21.2 | 0.353 |
| ACTGF40X6.7 SD6 | 40 x 6.7 | 10 | 40 | 6.7 | 26.6 | 0.555 |
| ACTGF50X8.3 SD6 | 50 x 8.3 | 5 | 50 | 8.3 | 33.4 | 0.876 |
| ACTGF63X10.5 SD6 | 63 x 10.5 | 5 | 63 | 10.5 | 42.0 | 1.385 |
| ACTGF75X12.5 SD6 | 75 x 12.5 | 5 | 75 | 12.5 | 50.0 | 1.963 |
| ACTGF90X15.0 SD6 | 90 x 15.0 | 3 | 90 | 15 | 60.0 | 2.826 |
| ACTGF110X18.3 SD6 | 110 x 18.3 | 2 | 110 | 18.3 | 73.4 | 4.229 |
| ACTGF125X20.8 SD6 | 125 x 20.8 | 1 | 125 | 20.8 | 83.4 | - |
| ACTGF160X26.6 SD6 | 160 x 26.6 | 1 | 160 | 26.6 | 106.8 | 8.954 |
| ACTGF200x33.2 SD6 | 200 x 33.2 | 1 | 200 | 33.2 | 133.6 | - |

- 20°C / 20 Bar & 70°C / 10 Bar



# PP-R Fiber Pipe – Glass Fiber Reinforced Pipes

| | |
|---|---|
| Standard dimension ratio | SDR:7.4 |
| Pipe Structure | 3 layer |
| Pipe Series | 3.2 (PN 20) |
| Standard | DIN 8077/8078 / EN ISO 15874-2 |
| Standard Color | Green |
| Standard Pipe Length | 4 meters |

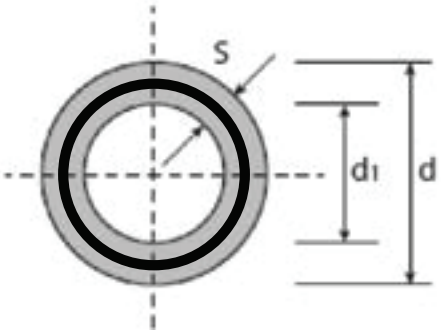


## Application




Potable water
Plumbing
Heating and cooling
Swimming pool
Chemical transport
Under floor heating and low temperature radiators

Service condition classification – Application class 1 (60°C) - see table C

Life expectancy depends on the operation temperature.
Permissible operating pressures in bar- See table D

Multilayer pipe with glass fiber reinforced mid layer for indoor and outdoor cold, hot water supply and central heating systems.

| Product Code | Size | Packing unit | Outer Diameter (d) | Wall Thickness (s) | Inner Diameter (d1) | Water Content l/m |
|---|---|---|---|---|---|---|
| | mm | Nos. | mm | mm | mm | l/m |
| AGF20X2.8 SD7.4 | 20 x 2.8 | 25 | 20 | 2.8 | 14.4 | 0.163 |
| AGF25X3.5 SD7.4 | 25 x 3.5 | 25 | 25 | 3.5 | 18.0 | 0.254 |
| AGF32X4.4 SD7.4 | 32 x 4.4 | 10 | 32 | 4.4 | 23.2 | 0.423 |
| AGF40X5.5 SD7.4 | 40 x 5.5 | 10 | 40 | 5.5 | 29.0 | 0.660 |
| AGF50X6.9 SD7.4 | 50 x 6.9 | 5 | 50 | 6.9 | 36.2 | 1.029 |
| AGF63X8.6 SD7.4 | 63 x 8.6 | 5 | 63 | 8.6 | 45.8 | 1.647 |
| AGF75X10.3 SD7.4 | 75 x 10.3 | 5 | 75 | 10.3 | 54.4 | 2.323 |
| AGF90X12.3 SD7.4 | 90 x 12.3 | 3 | 90 | 12.3 | 65.4 | 3.358 |
| AGF110X15.1 SD7.4 | 110 x 15.1 | 2 | 110 | 15.1 | 79.8 | 4.999 |
| AGF125X17.1 SD7.4 | 125 x 17.1 | 1 | 125 | 17.1 | 90.8 | - |
| AGF160X21.9 SD7.4 | 160 x 21.9 | 1 | 160 | 21.9 | 116.2 | 10.599 |
| AGF200X27.4 SD7.4 | 200 x 27.4 | 1 | 200 | 27.4 | 145.2 | - |

- 20°C / 20 Bar & 70°C / 8 Bar

# PP-RCT Fiber Pipe – Glass Fiber Reinforced Pipes

| | |
|---|---|
| Standard dimension ratio | SDR:7.4 |
| Pipe Structure | 3 layer |
| Pipe Series | 3.2 (PN 25) |
| Standard | DIN 8077/8078 / EN ISO 15874-2 |
| Standard Color | Green |
| Standard Pipe Length | 4 meters |

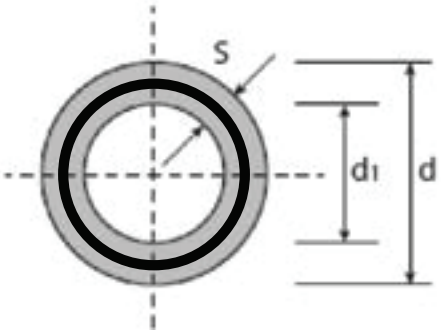


## Application




Potable water
Plumbing
Heating and cooling
Swimming pool
Chemical transport
Under floor heating and low temperature radiators

Service condition classification – Application class 1 (60°C) - see table C

Life expectancy depends on the operation temperature.
Permissible operating pressures in bar- See table D

Multilayer pipe with glass fiber reinforced mid layer for indoor and outdoor cold, hot water supply and central heating systems.

| Product Code | Size | Packing unit | Outer Diameter (d) | Wall Thickness (s) | Inner Diameter (d1) | Water Content l/m |
|---|---|---|---|---|---|---|
| | mm | Nos. | mm | mm | mm | l/m |
| ACTGF 20X2.8 SD7.4 | 20 x 2.8 | 25 | 20 | 2.8 | 14.4 | 0.163 |
| ACTGF 25X3.5 SD7.4 | 25 x 3.5 | 25 | 25 | 3.5 | 18.0 | 0.254 |
| ACTGF 32X4.4 SD7.4 | 32 x 4.4 | 10 | 32 | 4.4 | 23.2 | 0.423 |
| ACTGF 40X5.5 SD7.4 | 40 x 5.5 | 10 | 40 | 5.5 | 29.0 | 0.660 |
| ACTGF 50X6.9 SD7.4 | 50 x 6.9 | 5 | 50 | 6.9 | 36.2 | 1.029 |
| ACTGF 63X8.6 SD7.4 | 63 x 8.6 | 5 | 63 | 8.6 | 45.8 | 1.647 |
| ACTGF 75X10.3 SD7.4 | 75 x 10.3 | 5 | 75 | 10.3 | 54.4 | 2.323 |
| ACTGF 90X12.3 SD7.4 | 90 x 12.3 | 3 | 90 | 12.3 | 65.4 | 3.358 |
| ACTGF 110X15.1 SD7.4 | 110 x 15.1 | 2 | 110 | 15.1 | 79.8 | 4.999 |
| ACTGF 125X17.1 SD7.4 | 125 x 17.1 | 1 | 125 | 17.1 | 90.8 | - |
| ACTGF 160X21.9 SD7.4 | 160 x 21.9 | 1 | 160 | 21.9 | 116.2 | 10.599 |
| ACTGF 200X27.4 SD7.4 | 200 x 27.4 | 1 | 200 | 27.4 | 145.2 | 17.8 |

- 20°C / 20 Bar & 70°C / 8 Bar



# PP-RCT Standard Pipe

| | |
|---|---|
| Standard dimension ratio | SDR:9 |
| Pipe Structure | Single |
| Pipe Series | 4 (PN 16) |
| Standard | DIN 8077/8078 / EN ISO 15874-2 |
| Standard Color | Green |
| Standard Pipe Length | 4 meters |

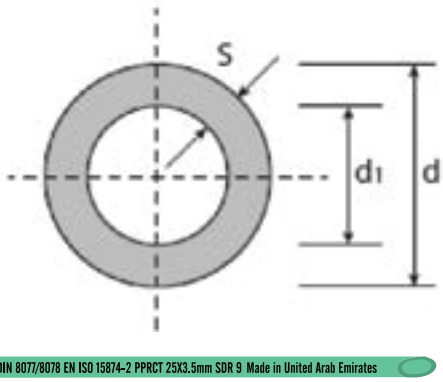


Cold & Hot water supply, Central heating systems.

## Application

Potable water
Plumbing
Heating and cooling
Swimming pool
Chemical transport
Under floor heating and low temperature radiators

Service condition classification – Application class 1 (60°C),
Class 2 (70°C) & Class 3 - see table C

| Product Code | Size | Packing unit | Outer Diameter (d) | Wall Thickness (s) | Inner Diameter (d1) | Water Content l/m |
|---|---|---|---|---|---|---|
| | mm | Nos. | mm | mm | mm | l/m |
| ACT20X2.3 SD9 | 20 x 2.3 | 25 | 20 | 2.3 | 15.4 | 0.186 |
| ACT25X2.8 SD9 | 25 x 2.8 | 25 | 25 | 2.8 | 19.4 | 0.295 |
| ACT32X3.6 SD9 | 32 x 3.6 | 10 | 32 | 3.6 | 24.8 | 0.483 |
| ACT40X4.5 SD9 | 40 x 4.5 | 10 | 40 | 4.5 | 31.0 | 0.754 |
| ACT50X5.6 SD9 | 50 x 5.6 | 5 | 50 | 5.6 | 38.8 | 1.182 |
| ACT63X7.1 SD9 | 63 x 7.1 | 5 | 63 | 7.1 | 48.8 | 1.869 |
| ACT75X8.4 SD9 | 75 x 8.4 | 5 | 75 | 8.4 | 58.2 | 2.659 |
| ACT90X10.1 SD9 | 90 x 10.1 | 3 | 90 | 10.1 | 69.8 | 3.825 |
| ACT110X12.3 SD9 | 110 x 12.3 | 2 | 110 | 12.3 | 85.4 | 5.725 |

# PP-RCT Standard Pipe

| | |
|---|---|
| Standard dimension ratio | SDR:7.4 |
| Pipe Structure | Single |
| Pipe Series | 3.2 (PN 25) |
| Standard | DIN 8077/8078 / EN ISO 15874-2 |
| Standard Color | Green |
| Standard Pipe Length | 4 meters |

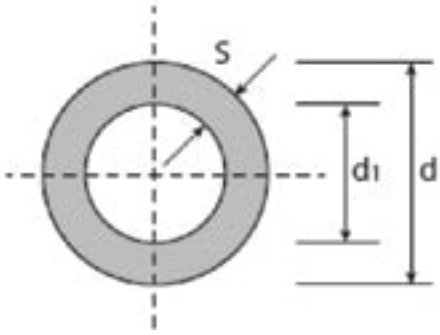





Cold & Hot water supply, Central heating systems.

## Application

Potable water
Plumbing
Heating and cooling
Swimming pool
Chemical transport
Under floor heating and low temperature radiators

Service condition classification – Application class 4
(Under floor heating & lowtemperature radiator)

| Product Code | Size | Packing unit | Outer Diameter (d) | Wall Thickness (s) | Inner Diameter (d1) | Water Content l/m |
|---|---|---|---|---|---|---|
| | mm | Nos. | mm | mm | mm | l/m |
| ACT20X2.8 SD7.4 | 20 x 2.8 | 25 | 20 | 2.8 | 14.4 | 0.163 |
| ACT25X3.5 SD7.4 | 25 x 3.5 | 25 | 25 | 3.5 | 18.0 | 0.254 |
| ACT32X4.4 SD7.4 | 32 x 4.4 | 10 | 32 | 4.4 | 23.2 | 0.423 |
| ACT40X5.5 SD7.4 | 40 x 5.5 | 10 | 40 | 5.5 | 29.0 | 0.660 |
| ACT50X6.9 SD7.4 | 50 x 6.9 | 5 | 50 | 6.9 | 36.2 | 1.029 |
| ACT63X8.6 SD7.4 | 63 x 8.6 | 5 | 63 | 8.6 | 45.8 | 1.647 |
| ACT75X10.3 SD7.4 | 75 x 10.3 | 5 | 75 | 10.3 | 54.4 | 2.323 |
| ACT90X12.3 SD7.4 | 90 x 12.3 | 3 | 90 | 12.3 | 65.4 | 3.358 |
| ACT110X15.1 SD7.4 | 110 x 15.1 | 2 | 110 | 15.1 | 79.8 | 4.999 |
| ACT125X17.1 SD7.4 | 125 x 17.1 | 1 | 125 | 17.1 | 90.8 | - |
| ACT160X21.9 SD7.4 | 160 x 21.9 | 1 | 160 | 21.9 | 116.2 | 10.599 |
| ACT200X27.4 SD7.4 | 200 x 27.4 | 1 | 200 | 27.4 | 145.2 | - |



# PP-RCT Standard Pipe

| | |
|---|---|
| Standard dimension ratio | SDR:11 |
| Pipe Structure | Single |
| Pipe Series | 5 (PN 12.5) |
| Standard | DIN 8077/8078 / EN ISO 15874-2 |
| Standard Color | Green |
| Standard Pipe Length | 6 meters |

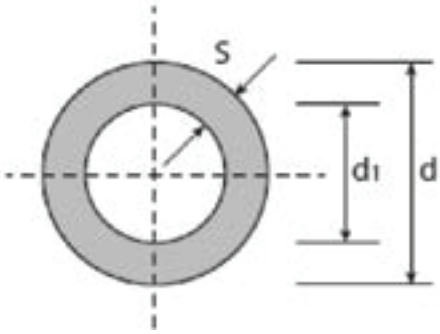


Cold & Hot water supply, Central heating systems.




## Application

Potable water
Plumbing
Heating and cooling
Swimming pool
Chemical transport
Under floor heating and low temperature radiators

Service condition classification – Application class 4
(Under floor heating & lowtemperature radiator)

| Product Code | Size | Packing unit | Outer Diameter (d) | Wall Thickness (s) | Inner Diameter (d1) | Water Content l/m |
|---|---|---|---|---|---|---|
| | mm | No. | mm | mm | mm | l/m |
| ACT160X14.6 SD11 | 160 x 14.6 | 1 | 160 | 14.6 | 130.8 | 13.43 |

# PRODUCTS RANGE - FITTNGS

## Elbow 90°



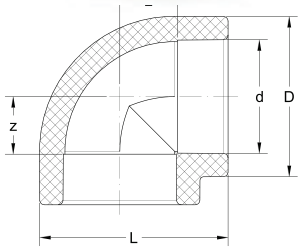


| CODE | | d | D | L | Z | Pack | Weight (gms) |
|---|---|---|---|---|---|---|---|
| PPR | PPRCT | | | | | | |
| APE9020 | ACTE9020 | 20 | 28.05 | 39.03 | 10.3 | 10 pcs | 16 |
| APE9025 | ACTE9025 | 25 | 35.05 | 46.28 | 12.55 | 10 pcs | 25 |
| APE9032 | ACTE9032 | 32 | 44.3 | 56.15 | 15.8 | 5 pcs | 45 |
| APE9040 | ACTE9040 | 40 | 55.45 | 68.23 | 19.8 | 5 pcs | 83 |
| APE9050 | ACTE9050 | 50 | 69.8 | 83.8 | 25 | 5 pcs | 160 |
| APE9063 | ACTE9063 | 63 | 87.6 | 103 | 31.5 | 1 pc | 294 |
| APE9075 | ACTE9075 | 75 | 100 | 119.5 | 38.3 | 1 pc | 447 |
| APE9090 | ACTE9090 | 90 | 119.6 | 140.8 | 45.3 | 1 pc | 715 |
| APE90110 | ACTE90110 | 110 | 147.3 | 170.65 | 55.3 | 1 pc | 1285 |
| APE90125T | ACTE90125T | 125 | 159 | 111 | 68 | 1 pc | 1620 |
| APE90160T | ACTE90160T | 160 | 204 | 165 | 90 | 1 pc | 3100 |
| APE90200T | ACTE90200T | 200 | 200 | 230 | 90 | 1 pc | 4500 |

## Elbow 45°



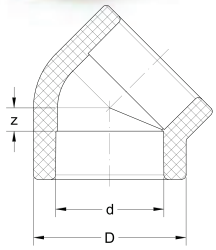


| CODE | | d | D | L | Z | Pack | Weight (gms) |
|---|---|---|---|---|---|---|---|
| PPR | PPRCT | | | | | | |
| APE4520 | ACTE4520 | 20 | 28.05 | 19.2 | 4.5 | 10 pcs | 13 |
| APE4525 | ACTE4525 | 25 | 35.05 | 21.5 | 5.3 | 10 pcs | 20 |
| APE4532 | ACTE4532 | 32 | 44.3 | 25 | 6.8 | 5 pcs | 35 |
| APE4540 | ACTE4540 | 40 | 55.45 | 29.5 | 8.8 | 5 pcs | 65 |
| APE4550 | ACTE4550 | 50 | 69.5 | 34.5 | 10.8 | 5 pcs | 120 |
| APE4563 | ACTE4563 | 63 | 87.7 | 41 | 13.5 | 1 pc | 225 |
| APE4575 | ACTE4575 | 75 | 100 | 47.5 | 16.3 | 1 pc | 327 |
| APE4590 | ACTE4590 | 90 | 119.6 | 55 | 19.3 | 1 pc | 517 |
| APE45110 | ACTE45110 | 110 | 147.3 | 65 | 23.3 | 1 pc | 975 |
| APE45125T | ACTE45125T | 125 | 159 | 111 | 68 | 1 pc | 1050 |
| APE45160T | ACTE45160T | 160 | 204 | 88 | 40 | 1 pc | 2250 |
| APE45200T | ACTE45200T | 200 | 200 | 165 | 40 | 1 pc | 3640 |

## Socket



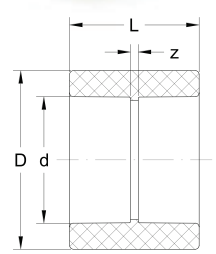


| CODE | | d | D | L | Z | Pack | Weight (gms) |
|---|---|---|---|---|---|---|---|
| PPR | PPRCT | | | | | | |
| APS20 | ACTS20 | 20 | 28.05 | 32 | 2.6 | 10 pcs | 10 |
| APS25 | ACTS25 | 25 | 34.5 | 35.5 | 3.1 | 10 pcs | 15 |
| APS32 | ACTS32 | 32 | 44.3 | 39.4 | 3 | 5 pcs | 28 |
| APS40 | ACTS40 | 40 | 55.5 | 46 | 4.6 | 5 pcs | 52 |
| APS50 | ACTS50 | 50 | 69.5 | 50.4 | 3 | 5 pcs | 86 |
| APS63 | ACTS63 | 63 | 88 | 60 | 4.6 | 1 pc | 160 |
| APS75 | ACTS75 | 75 | 100 | 66.4 | 4 | 1 pc | 215 |
| APS90 | ACTS90 | 90 | 119.6 | 76.4 | 5 | 1 pc | 350 |
| APS110 | ACTS110 | 110 | 147.3 | 88.4 | 5 | 1 pc | 615 |
| APS125T | ACTS125T | 125 | 159 | 94 | 9 | 1 pc | 700 |
| APS160T | ACTS160T | 160 | 204 | 102 | 10 | 1 pc | 1260 |
| APS200T | ACTS200T | 200 | 204 | 102 | - | 1 pc | 1500 |



## Reducer



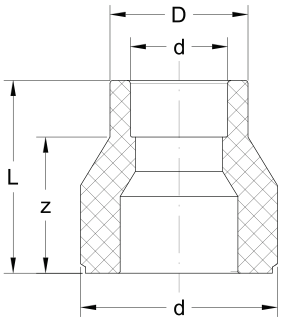


| CODE | | d | D | L | Z | Pack | Weight (gms) |
|---|---|---|---|---|---|---|---|
| PPR | PPRCT | | | | | | |
| APR25X20 | ACTR25X20 | 25x20 | 25.2 | 38 | 4.8 | 10 pcs | 11 |
| APR32X20 | ACTR32X20 | 32x20 | 32.15 | 41.2 | 8 | 5 pcs | 16 |
| APR32X25 | ACTR32X25 | 32x25 | 32.15 | 42.7 | 8 | 5 pcs | 20 |
| APR40X20 | ACTR40X20 | 40x20 | 40.15 | 45.7 | 10 | 5 pcs | 25 |
| APR40X25 | ACTR40X25 | 40x25 | 40.15 | 47.2 | 10 | 5 pcs | 29 |
| APR40X32 | ACTR40X32 | 40x32 | 40.15 | 49.2 | 10 | 5 pcs | 36 |
| APR50X20 | ACTR50X20 | 50x20 | 50.2 | 51.2 | 12.5 | 5 pcs | 42 |
| APR50X25 | ACTR50X25 | 50x25 | 50.2 | 52.7 | 12.5 | 5 pcs | 46 |
| APR50X32 | ACTR50X32 | 50x32 | 50.2 | 54.7 | 12.5 | 5 pcs | 52 |
| APR50X40 | ACTR50X40 | 50x40 | 50.2 | 57.2 | 12.5 | 5 pcs | 66 |
| APR63X20 | ACTR63X20 | 63x20 | 63.2 | 58.4 | 15.5 | 1 pc | 77 |
| APR63X25 | ACTR63X25 | 63x25 | 63.2 | 59.9 | 15.5 | 1 pc | 80 |
| APR63X32 | ACTR63X32 | 63x32 | 63.2 | 61.9 | 15.5 | 1 pc | 86 |
| APR63X40 | ACTR63X40 | 63x40 | 63.2 | 64.4 | 15.5 | 1 pc | 97 |
| APR63X50 | ACTR63X50 | 63x50 | 63.2 | 67.4 | 15.5 | 1 pc | 121 |
| APR75X40 | ACTR75X40 | 75x40 | 75.25 | 71.2 | 18.5 | 1 pc | 129 |
| APR75X50 | ACTR75X50 | 75x50 | 75.25 | 74.2 | 18.5 | 1 pc | 150 |
| APR75X63 | ACTR75X63 | 75x63 | 75.25 | 78.2 | 18.5 | 1 pc | 194 |
| APR90X50 | ACTR90X50 | 90x50 | 90.3 | 82.7 | 22.5 | 1 pc | 221 |
| APR90X63 | ACTR90X63 | 90x63 | 90.3 | 86.7 | 22.5 | 1 pc | 260 |
| APR90X75 | ACTR90X75 | 90x75 | 90.3 | 90.2 | 22.5 | 1 pc | 288 |
| APR110X63 | ACTR110X63 | 110x63 | 110.3 | 97.7 | 27.5 | 1 pc | 394 |
| APR110X75 | ACTR110X75 | 110x75 | 110.3 | 101.2 | 27.5 | 1 pc | 420 |
| APR110X90 | ACTR110X90 | 110x90 | 110.3 | 105.7 | 27.5 | 1 pc | 500 |
| APR125X110T | ACTR125X110T | 125X110 | 159 | 105 | 63 | 1 pc | 760 |
| APR160X125T | ACTR160X125T | 160X125 | 204 | 115 | 72 | 1 pc | 1380 |
| APR200X125T | ACTR200X125T | 200X125 | 204 | 235 | 72 | 1 pc | 1848 |
| APR200X160T | ACTR200X160T | 200X160 | 204 | 231 | 72 | 1 pc | 1985 |

## Equal Tee



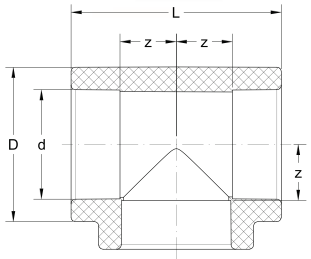


| CODE | | d | D | L | Z | Pack | Weight (gms) |
|---|---|---|---|---|---|---|---|
| PPR | PPRCT | | | | | | |
| APT20 | ACTT20 | 20 | 28.05 | 51 | 10.8 | 10 pcs | 20 |
| APT25 | ACTT25 | 25 | 35.05 | 60 | 10.8 | 10 pcs | 32 |
| APT32 | ACTT32 | 32 | 44.3 | 69 | 16.3 | 5 pcs | 57 |
| APT40 | ACTT40 | 40 | 55.5 | 82 | 20.3 | 5 pcs | 107 |
| APT50 | ACTT50 | 50 | 69.3 | 98 | 25.3 | 1 pc | 189 |
| APT63 | ACTT63 | 63 | 87.7 | 119 | 31.8 | 1 pc | 365 |
| APT75 | ACTT75 | 75 | 99.6 | 138 | 37.8 | 1 pc | 515 |
| APT90 | ACTT90 | 90 | 119.6 | 162 | 45.3 | 1 pc | 862 |
| APT110 | ACTT110 | 110 | 146.7 | 184 | 54.8 | 1 pc | 1496 |
| APT125T | ACT125T | 125 | 150 | 233 | 73.5 | 1 pc | 2100 |
| APT160T | ACT160T | 160 | 204 | 290 | 100 | 1 pc | 4340 |
| APT200T | ACT200T | 200 | 200 | 460 | 100 | 1 pc | 6400 |

## Reducing Tee



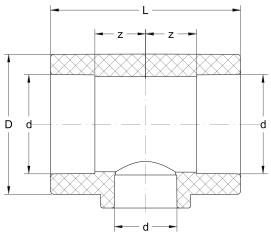


| CODE | | d | D | L | Z | Pack | Weight (gms) |
|---|---|---|---|---|---|---|---|
| PPR | PPRCT | | | | | | |
| APRT20X25X20 | ACTRT20X25X20 | 20 X 25 X 20 | 35.05 | 58 | 12.8 | 10 pcs | 40 |
| APRT25X20X20 | ACTRT25X20X20 | 25 X 20 X 20 | 35.05 | 58 | 12.8 | 10 pcs | 40 |
| APRT25X20 | ACTRT25X20 | 25 X 20 X 25 | 35.05 | 58 | 12.8 | 10 pcs | 35 |
| APRT32X20 | ACTRT32X20 | 32 X 20 X 32 | 44.3 | 69 | 16.3 | 5 pcs | 52 |
| APRT25X32 | ACTRT25X32 | 25 X 32 X 25 | 44.3 | 69 | 16.3 | 5 pcs | 70 |
| APRT32X25 | ACTRT32X25 | 32 X 25 X 32 | 44.3 | 69 | 16.3 | 5 pcs | 64 |
| APRT40X20 | ACTRT40X20 | 40 X 20 X 40 | 55.5 | 82 | 20.3 | 1 pc | 97 |
| APRT40X25 | ACTRT40X25 | 40 X 25 X 40 | 55.5 | 82 | 20.3 | 1 pc | 97 |
| APRT40X32 | ACTRT40X32 | 40 X 32 X 40 | 55.5 | 82 | 20.3 | 1 pc | 100 |
| APRT50X20 | ACTRT50X20 | 50 X 20 X 50 | 69.5 | 98 | 25.3 | 1 pc | 172 |
| APRT50X25 | ACTRT50X25 | 50 X 25 X 50 | 69.5 | 98 | 25.3 | 1 pc | 174 |
| APRT50X32 | ACTRT50X32 | 50 X 32 X 50 | 69.5 | 98 | 25.3 | 1 pc | 175 |
| APRT50X40 | ACTRT50X40 | 50 X 40 X 50 | 69.5 | 98 | 25.3 | 1 pc | 180 |
| APRT63X20 | ACTRT63X20 | 63 X 20 X 63 | 87.7 | 119 | 31.8 | 1 pc | 332 |
| APRT63X25 | ACTRT63X25 | 63 X 25 X 63 | 87.7 | 119 | 31.8 | 1 pc | 332 |
| APRT63X32 | ACTRT63X32 | 63 X 32 X 63 | 87.7 | 119 | 31.8 | 1 pc | 330 |
| APRT63X40 | ACTRT63X40 | 63 X 40 X 63 | 87.7 | 119 | 31.8 | 1 pc | 332 |
| APRT63X50 | ACTRT63X50 | 63 X 50 X 63 | 87.7 | 119 | 31.8 | 1 pc | 340 |
| APRT75X32 | ACTRT75X32 | 75 X 32 X 75 | 100 | 138 | 37.8 | 1 pc | 480 |
| APRT75X40 | ACTRT75X40 | 75 X 40 X 75 | 100 | 138 | 37.8 | 1 pc | 479 |
| APRT75X50 | ACTRT75X50 | 75 X 50 X 75 | 100 | 138 | 37.8 | 1 pc | 484 |
| APRT75X63 | ACTRT75X63 | 75 X 63 X 75 | 100 | 138 | 37.8 | 1 pc | 503 |
| APRT90X40 | ACTRT90X40 | 90 X 40 X 90 | 119.6 | 162 | 45.3 | 1 pc | 800 |
| APRT90X50 | ACTRT90X50 | 90 X 50 X 90 | 119.6 | 162 | 45.3 | 1 pc | 805 |
| APRT90X63 | ACTRT90X63 | 90 X 63 X 90 | 119.6 | 162 | 45.3 | 1 pc | 808 |
| APRT90X75 | ACTRT90X75 | 90 X 75 X 90 | 119.6 | 162 | 45.3 | 1 pc | 820 |
| APRT110X63 | ACTRT110X63 | 110 X 63 X 110 | 147.3 | 184 | 54.8 | 1 pc | 1345 |
| APRT110X75 | ACTRT110X75 | 110 X 75 X 110 | 147.3 | 184 | 54.8 | 1 pc | 1350 |
| APRT110X90 | ACTRT110X90 | 110 X 90 X 110 | 147.3 | 184 | 54.8 | 1 pc | 1391 |
| APRT125X110T | ACTRT125X110T | 125 X 110 X 125 | 159 | 233 | 70 | 1 pc | 2000 |
| APRT160X110T | ACTRT160X110T | 160 X 110 X 160 | 204 | 290 | 97 | 1 pc | 3900 |
| APRT160X125T | ACTRT160X125T | 160 X 125 X 160 | 204 | 290 | 97 | 1 pc | 4400 |
| APRT200X110T | ACTRT200X110T | 200 X 110 X 200 | 204 | 405 | 97 | 1 pc | 4800 |
| ART200X160T | ACTRT200X160T | 200 X 160 X 200 | 204 | 460 | 97 | 1 pc | 5800 |

## End Plug



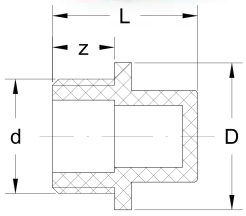


| CODE | | d | D | L | Z | Pack | Weight (gms) |
|---|---|---|---|---|---|---|---|
| PPR | PPRCT | | | | | | |
| APEP0.5 | ACTEP0.5 | 1/2" | 28 | 28.7 | 13.2 | 10 pcs | 8 |
| APEP0.75 | ACTEP0.75 | 3/4" | 34.5 | 29 | 14.5 | 10 pcs | 11 |
| APEP1 | ACTEP1 | 1" | 38.5 | 31.5 | 17 | 10 pcs | 17 |



## End Cap



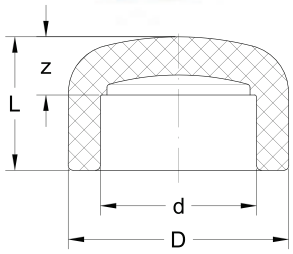


| CODE | | d | D | L | Z | Pack | Weight (gms) |
|---|---|---|---|---|---|---|---|
| PPR | PPRCT | | | | | | |
| APEC20 | ACTEC20 | 20 | 28.05 | 22.8 | 8.1 | 10 pcs | 10 |
| APEC25 | ACTEC25 | 25 | 35.05 | 25 | 8.8 | 10 pcs | 13 |
| APEC32 | ACTEC32 | 32 | 44.3 | 29.2 | 11 | 5 pcs | 24 |
| APEC40 | ACTEC40 | 40 | 55.45 | 32.5 | 11.8 | 5 pcs | 40 |
| APEC50 | ACTEC50 | 50 | 69.5 | 38.2 | 14.5 | 5 pcs | 76 |
| APEC63 | ACTEC63 | 63 | 88 | 44 | 16.3 | 1 pc | 140 |
| APEC75 | ACTEC75 | 75 | 100 | 50 | 18.8 | 1 pc | 200 |
| APEC90 | ACTEC90 | 90 | 119 | 55 | 19.3 | 1 pc | 300 |
| APEC110 | ACTEC110 | 110 | 147.3 | 67 | 25.3 | 1 pc | 568 |
| APEC125T | ACTEC125T | 125 | 159 | 96 | 54 | 1 pc | 800 |
| APEC160T | ACTEC160T | 160 | 204 | 105 | 60 | 1 pc | 1500 |
| APEC200T | ACTEC200T | 200 | 200 | 190 | 60 | 1 pc | 1940 |

## Cross Tee



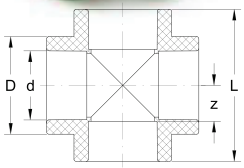


| CODE | | d | D | L | Z | Pack | Weight (gms) |
|---|---|---|---|---|---|---|---|
| PPR | PPRCT | | | | | | |
| APCT20 | ACTCT20 | 20 | 28.05 | 51 | 10.8 | 10 pcs | 25 |
| APCT25 | ACTCT25 | 25 | 35.05 | 58 | 12.8 | 10 pcs | 37 |
| APCT32 | ACTCT32 | 32 | 44.3 | 69 | 16.36 | 5 pcs | 65 |

## Stub



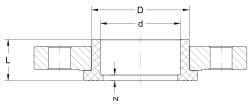

| CODE | | d | D | L | Z | Pack | Weight (gms) |
|---|---|---|---|---|---|---|---|
| PPR | PPRCT | | | | | | |
| APST63 | ACTST63 | 63 | 76 | 36 | 8.35 | 1 pc | 75 |
| APST75 | ACTST75 | 75 | 89.45 | 40.15 | 8.6 | 1 pc | 105 |
| APST90 | ACTST90 | 90 | 109 | 45.6 | 8.8 | 1 pc | 167 |
| APST110 | ACTST110 | 110 | 130.6 | 52.2 | 9.6 | 1 pc | 250 |
| APST125 | ACTST125 | 125 | 140 | 50 | 5.3 | 1 pc | - |
| APST160 | ACTST160 | 160 | 158 | 55 | 5.5 | 1 pc | - |
| APST200 | ACTST200 | 200 | 170 | 58 | 5.5 | 1 pc | - |

## Rubber Gasket



| CODE | Size | Outer Dia | Thikness | Inside Dia | Pack | Weight (gms) |
|---|---|---|---|---|---|---|
| TRG03887 | 63 | 95.3 | 2.9 | 63.5 | 1 pc | 17 |
| TRG03890 | 75 | 107.6 | 3 | 75.2 | 1 pc | 19.6 |
| TRG03893 | 90 | 125.6 | 3.1 | 80.6 | 1 pc | 36.5 |
| TRG03896 | 110 | 147.7 | 3 | 109.5 | 1 pc | 32.1 |

## GI Backing Ring

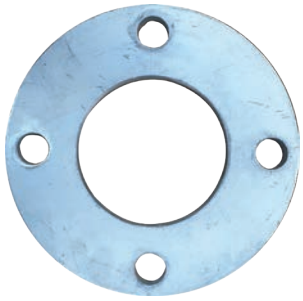

| CODE | Size | Outer Dia | Thikness | Inside Dia | Pack | Weight (gms) |
|---|---|---|---|---|---|---|
| TRG03885 | 63 | 164.88 | 12.2 | 77.05 | 1 pc | 1490 |
| TRG03888 | 75 | 185.6 | 12.2 | 75.2 | 1 pc | 1820 |
| TRG03891 | 90 | 200.4 | 12 | 110 | 1 pc | 1875 |
| TRG03894 | 110 | 220.4 | 11.9 | 134.5 | 1 pc | 2012 |



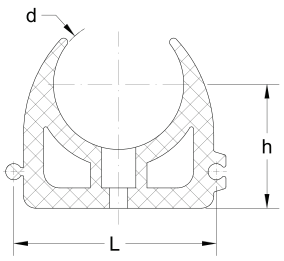


## Pipe Bracket

| CODE | | d | L | h | Pack | Weight (gms) |
|---|---|---|---|---|---|---|
| PPR | PPRCT | | | | | |
| APPB20 | ACTPB20 | 20 | 35.5 | 24.9 | 20 pcs | 10 |
| APPB25 | ACTPB25 | 25 | 41 | 27.4 | 20 pcs | 12 |
| APPB32 | ACTPB32 | 32 | 50 | 30.6 | 20 pcs | 15 |



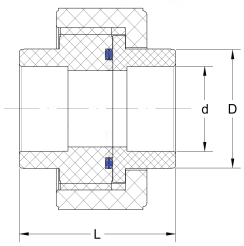


## Plastic Union

| CODE | | d | D | L | Pack | Weight (gms) |
|---|---|---|---|---|---|---|
| PPR | PPRCT | | | | | |
| APU20 | ACTU20 | 20 | 28.05 | 42 | 10 pcs | 28 |
| APU25 | ACTU25 | 25 | 34.5 | 49 | 10 pcs | 70 |
| APU32 | ACTU32 | 32 | 44.3 | 59 | 5 pcs | 127 |



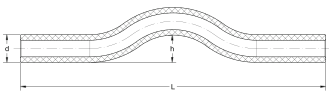

## Cross Over

| CODE | | d | L | h | Pack | Weight (gms) |
|---|---|---|---|---|---|---|
| PPR | PPRCT | | | | | |
| APCO20 | ACTCO20 | 20 | 352 | 22 | 10 pcs | 60 |
| APCO25 | ACTCO25 | 25 | 352 | 25 | 10 pcs | 91 |
| APCO32 | ACTCO32 | 32 | 352 | 32 | 5 pcs | 154 |

# PRODUCTS RANGE - TRANSITION FITTNGS

## Male Elbow -Transition



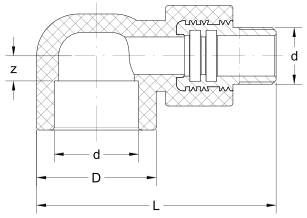


| CODE | | d | D | L | Z | Pack | Weight (gms) |
|---|---|---|---|---|---|---|---|
| PPR | PPRCT | | | | | | |
| APME20X0.5 | ACTME20X0.5 | 20x1/2 | 37.2 | 66.83 | 16.8 | 10 pcs | 84 |
| APME20X0.75 | ACTME20X0.75 | 20x3/4 | 38 | 67.78 | 17.75 | 10 pcs | 92 |
| APME25X0.5 | ACTME25X0.5 | 25x1/2 | 37.2 | 70.03 | 17.55 | 10 pcs | 94 |
| APME25X0.75 | ACTME25X0.75 | 25x3/4 | 38 | 71.03 | 20.15 | 10 pcs | 101 |
| APME32X0.5 | ACTME32X0.5 | 32x1/2 | 44.3 | 88.75 | 9.3 | 5 pcs | 104 |
| APME32X0.75 | ACTME32X0.75 | 32x3/4 | 44.3 | 90.55 | 9.3 | 5 pcs | 109 |
| APME32X1 | ACTME32X1 | 32X1 | 52 | 92.15 | 13.8 | 5 pcs | 239 |

## Female Elbow -Transition



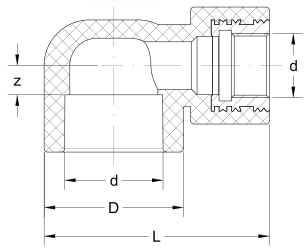


| CODE | | d | D | L | Z | Pack | Weight (gms) |
|---|---|---|---|---|---|---|---|
| PPR | PPRCT | | | | | | |
| APFE20X0.5 | ACTFE20X0.5 | 20x1/2 | 37.2 | 48.95 | 15.65 | 10 pcs | 63 |
| APFE20X0.75 | ACTFE20X0.75 | 20x3/4 | 44.3 | 54.6 | 17.75 | 10 pcs | 83 |
| APFE25X0.5 | ACTFE25X0.5 | 25x1/2 | 37.2 | 52.35 | 17.55 | 10 pcs | 73 |
| APFE25X0.75 | ACTFE25X0.75 | 25x3/4 | 44.3 | 58.5 | 20.15 | 10 pcs | 94 |
| APFE32X0.5 | ACTFE32X0.5 | 32x1/2 | 44.3 | 71.6 | 9.3 | 5 pcs | 83 |
| APFE32X0.75 | ACTFE32X0.75 | 32x3/4 | 43.3 | 72.3 | 9.3 | 5 pcs | 99 |
| APFE32X1 | ACTFE32X1 | 32X1 | 52 | 75.35 | 15.2 | 5 pcs | 208 |

## Female Tee -Transition



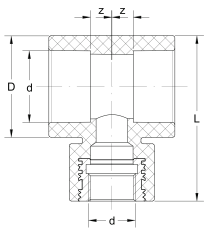


| CODE | | d | D | L | Z | Pack | Weight (gms) |
|---|---|---|---|---|---|---|---|
| PPR | PPRCT | | | | | | |
| APFT20X0.5 | ACTFT20X0.5 | 20x1/2x20 | 37.2 | 62.5 | 16.55 | 10 pcs | 74 |
| APFT20X0.75 | ACTFT20X0.75 | 20x3/4x20 | 48.3 | 62.5 | 16.55 | 10 pcs | 87 |
| APFT25X0.5 | ACTFT25X0.5 | 25x1/2x25 | 37.2 | 62.5 | 15.05 | 10 pcs | 79 |
| APFT25X0.75 | ACTFT25X0.75 | 25x3/4x25 | 44.3 | 73 | 20.3 | 10 pcs | 99 |
| APFT32X0.5 | ACTFT32X0.5 | 32x1/2x32 | 44.3 | 72.15 | 16.8 | 5 pcs | 93 |
| APFT32X0.75 | ACTFT32X0.75 | 32x3/4x32 | 44.3 | 71.8 | 10.8 | 5 pcs | 107 |
| APFT32X1 | ACTFT32X1 | 32x1x32 | 52 | 76.05 | 14.8 | 5 pcs | 211 |



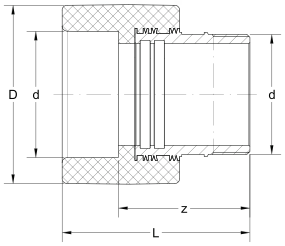


## Male Hex Socket - Transition

| CODE | | d | D | L | Z | Pack | Weight (gms) |
|---|---|---|---|---|---|---|---|
| PPR | PPRCT | | | | | | |
| APMHS32X1 | ACTMHS32X1 | 32X1 | 53 | 74.2 | 59 | 5 pcs | 217 |
| APMHS40X1 | ACTMHS40X1 | 40X1 | 55.46 | 77.2 | 59.5 | 5 pcs | 233 |
| APMHS40X1.25 | ACTMHS40X1.25 | 40X11/4 | 64 | 79 | 58.3 | 1 pc | 335 |
| APMHS50X1.5 | ACTMHS50X1.5 | 50X11/2 | 73.2 | 85.7 | 62 | 1 pc | 398 |
| APMHS63X2 | ACTMHS63X2 | 63X2 | 87.6 | 92.3 | 64.6 | 1 pc | 604 |
| APMHS75X2.5 | ACTMHS75X2.5 | 75X21/2 | 100 | 98.2 | 67 | 1 pc | 782 |
| APMHS90X3 | ACTMHS90X3 | 90X3 | 119.6 | 115.3 | 84.6 | 1 pc | 1516 |
| APMHS110X4 | ACTMHS110X4 | 110X4 | 174.5 | 165.5 | 122 | 1 pc | 4655 |



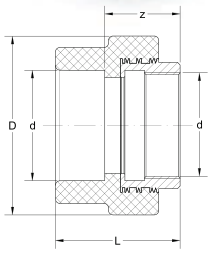


## Female Hex Socket - Transition

| CODE | | d | D | L | Z | Pack | Weight (gms) |
|---|---|---|---|---|---|---|---|
| PPR | PPRCT | | | | | | |
| APFHS32X1 | ACTFHS32X1 | 32X1 | 59.5 | 55.4 | 37.2 | 5 pcs | 190 |
| APFHS40X1 | ACTFHS40X1 | 40X1 | 60 | 58 | 37.3 | 5 pcs | 203 |
| APFHS40X1.25 | ACTFHS40X1.25 | 40X11/4 | 74 | 57.6 | 36.9 | 1 pc | 293 |
| APFHS50X1.5 | ACTFHS50X1.5 | 50X11/2 | 85.6 | 64 | 40.3 | 1 pc | 401 |
| APFHS63X2 | ACTFHS63X2 | 63X2 | 100.5 | 70 | 42.3 | 1 pc | 603 |
| APFHS75X2.5 | ACTFHS75X2.5 | 75X21/2 | 126 | 76.8 | 45.6 | 1 pc | 779 |
| APFHS90X3 | ACTFHS90X3 | 90X3 | 145 | 89 | 53.3 | 1 pc | 1264 |
| APFHS110X4 | ACTFHS110X4 | 110X4 | 174.5 | 132 | 90 | 1 pc | 3415 |



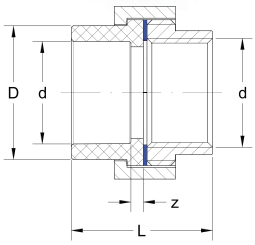


## Female Brass Union - Transition

| CODE | | d | D | L | Z | Pack | Weight (gms) |
|---|---|---|---|---|---|---|---|
| PPR | PPRCT | | | | | | |
| APFBU20X0.5 | ACTFBU20X0.5 | 20x1/2 | 27 | 17.2 | 2.5 | 10 pcs | 6 |
| APFBU25X0.75 | ACTFBU25X0.75 | 25x3/4 | 34.3 | 19.5 | 3.3 | 10 pcs | 11 |
| APFBU32X1 | ACTFBU32X1 | 32X1 | 40.6 | 22 | 3.8 | 5 pcs | 14 |
| APFBU40X1.25 | ACTFBU40X1.25 | 40X11/4 | 51 | 25 | 4.8 | 1 pc | 25 |
| APFBU50X1.5 | ACTFBU50X1.5 | 50X11/2 | 65.6 | 28 | 4.3 | 1 pc | 45 |
| APFBU63X2 | ACTFBU63X2 | 63X2 | 81.8 | 34.5 | 6.9 | 1 pc | 90 |





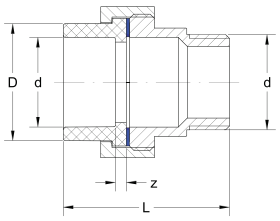


## Male Brass Union - Transition

| CODE | | d | D | L | Z | Pack | Weight (gms) |
|---|---|---|---|---|---|---|---|
| PPR | PPRCT | | | | | | |
| APMBU20X0.5 | ACTMBU20X0.5 | 20x1/2 | 27 | 17.2 | 2.5 | 10 pcs | 6 |
| APMBU25X0.75 | ACTMBU20X0.5 | 25x3/4 | 34.3 | 19.5 | 3.3 | 10 pcs | 11 |
| APMBU32X1 | ACTMBU20X0.5 | 32X1 | 40.6 | 22 | 3.8 | 5 pcs | 14 |
| APMBU40X1.25 | ACTMBU20X0.5 | 40X11/4 | 51 | 25 | 4.8 | 1 pc | 25 |
| APMBU50X1.5 | ACTMBU20X0.5 | 50X11/2 | 65.6 | 28 | 4.3 | 1 pc | 45 |
| APMBU63X2 | ACTMBU20X0.5 | 63X2 | 81.8 | 34.5 | 6.9 | 1 pc | 90 |



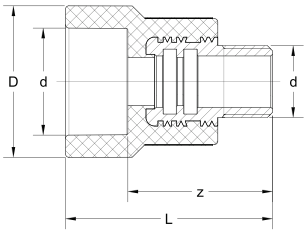


## Male Socket - Transition

| CODE | | d | D | L | Z | Pack | Weight (gms) |
|---|---|---|---|---|---|---|---|
| PPR | PPRCT | | | | | | |
| APMS20X0.5 | ACTMS20X0.5 | 20x1/2 | 37.8 | 56 | 41.3 | 10 pcs | 75 |
| APMS20X0.75 | ACTMS20X0.75 | 20x3/4 | 37.8 | 57 | 42.3 | 10 pcs | 81 |
| APMS25X0.5 | ACTMS25X0.5 | 25x1/2 | 38.8 | 56 | 39.8 | 10 pcs | 77 |
| APMS25X0.75 | ACTMS25X0.75 | 25x3/4 | 36.8 | 57 | 40.8 | 10 pcs | 82 |
| APMS32X0.5 | ACTMS32X0.5 | 32x1/2 | 44.3 | 60.5 | 42.3 | 5 pcs | 85 |
| APMS32X0.75 | ACTMS32X0.75 | 32x3/4 | 44.3 | 59.8 | 41.6 | 5 pcs | 89 |



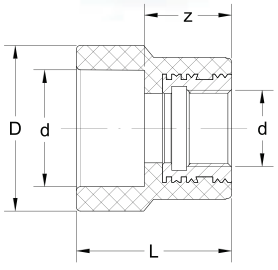


## Female Socket - Transition

| CODE | | d | D | L | Z | Pack | Weight (gms) |
|---|---|---|---|---|---|---|---|
| PPR | PPRCT | | | | | | |
| APFS20X0.5 | ACTFS20X0.5 | 20x1/2 | 37.5 | 40 | 23 | 10 pcs | 57 |
| APFS20X0.75 | ACTFS20X0.5 | 20x3/4 | 43.5 | 40 | 23.35 | 10 pcs | 72 |
| APFS25X0.5 | ACTFS20X0.5 | 25x1/2 | 38 | 39.8 | 23.6 | 10 pcs | 58 |
| APFS25X0.75 | ACTFS20X0.5 | 25x3/4 | 43.5 | 40 | 23.8 | 10 pcs | 73 |
| APFS32X0.5 | ACTFSE20X0.5 | 32x1/2 | 44.3 | 41.5 | 23.3 | 10 pcs | 64 |
| APFS32X0.75 | ACTFS 20X0.5 | 32x3/4 | 44.8 | 41.5 | 23.3 | 5 pcs | 76 |



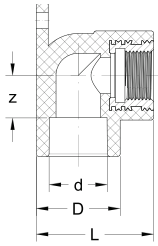


## Wall Mount Elbow

| CODE | | d | D | L | Z | Pack | Weight (gms) |
|---|---|---|---|---|---|---|---|
| PPR | PPRCT | | | | | | |
| APWME20X0.5 | ACTWME20X0.5 | 20x1/2 | 37.2 | 48.95 | 15.65 | 10 pcs | 73 |
| APWME25X0.5 | ACTWME25X0.5 | 25x1/2 | 37.2 | 52.35 | 17.55 | 10 pcs | 83 |
| APWME25X0.75 | ACTWME25X0.75 | 25x3/4 | 38.8 | 56 | 39.8 | 10 pcs | 104 |



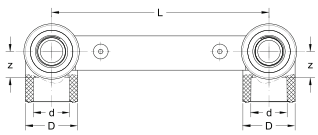


## Double Female Elbow With Tape Connector

| CODE | | d | D | L | Z | Pack | Weight (gms) |
|---|---|---|---|---|---|---|---|
| PPR | PPRCT | | | | | | |
| APWMG25X0.5 | ACTWMG25X0.5 | 25x1/2 | 37.2 | 146 | 17.55 | 1 SET | 180 |



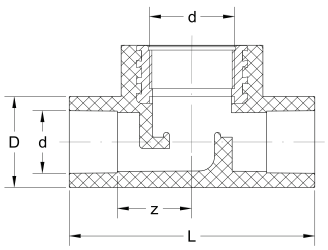


## Valve Body

| CODE | | d | D | L | Z | Pack | Weight (gms) |
|---|---|---|---|---|---|---|---|
| PPR | PPRCT | | | | | | |
| APVB20X0.75 | ACTVB20X0.75 | 20 | 28.05 | 75 | 21.65 | 1 pc | 90 |
| APVB25X0.75 | ACTVB25X0.75 | 25 | 35.05 | 75 | 21.65 | 1 pc | 98 |
| APVB32X1 | ACTVB32X1 | 32 | 44.3 | 98 | 26 | 1 pc | 234 |



## Stop Valve

| CODE | | d | D | L | Z | Pack | Weight (gms) |
|---|---|---|---|---|---|---|---|
| PPR | PPRCT | | | | | | |
| APSGV20X0.75 | ACTSGV20X0.75 | 20 | 28.05 | 75 | 21.65 | 1 pcs | 198 |
| APSGV25X0.75 | ACTSGV25X0.75 | 25 | 35.05 | 75 | 21.65 | 1 pcs | 207 |
| APSGV32X1 | ACTSGV32X1 | 32 | 44.3 | 98 | 26 | 1 pcs | 320 |
| APSGV40X1 | ACTSGV40X1 | 40 | 48 | 108 | 28 | 1 pcs | 350 |
| APSGV50X1.25 | ACTSGV50X1.25 | 50 | 54 | 120 | 32 | 1 pcs | 610 |



## Concealed Valve

| CODE | | d | D | L | Z | Pack | Weight (gms) |
|---|---|---|---|---|---|---|---|
| PPR | PPRCT | | | | | | |
| APCV20X0.75 | ACTCV20X0.75 | 20 | 28.05 | 75 | 21.65 | 10 pcs | 410 |
| APCV25X0.75 | ACTCV25X0.75 | 25 | 35.05 | 75 | 21.65 | 10 pcs | 419 |
| APCV32X1 | ACTCV32X1 | 32 | 44.3 | 98 | 26 | 10 pcs | 433 |



## Ball Valve

| CODE | d | D | L | Z | Pack | Weight (gms) |
|---|---|---|---|---|---|---|
| TRG03904 | 20 | 29.6 | 64.5 | 37.5 | 1 PC | 91 |
| TRG03905 | 25 | 35.7 | 77 | 47.9 | 1 PC | 127 |
| TRG03906 | 32 | 46.2 | 85.3 | 49.7 | 1 PC | 214 |
| TRG03907 | 40 | 56.52 | 100.5 | 57.3 | 1 PC | 305 |
| TRG03908 | 50 | 71 | 115.2 | 71.4 | 1 PC | 570 |
| TRG03909 | 63 | 89.3 | 145 | 83.7 | 1 PC | 1091 |
| TRG03910 | 75 | 105.5 | 154 | 81.1 | 1 PC | 1485 |

# PRODUCTS RANGE - ACCESSORIES



| CODE | DESCRIPTION | CAPACITY |
|---|---|---|
| | PPRC WELDING MACHINE SET (20-40MM SOCKET) | 750+750 watt |
| | 50 - 160 MM SOCKET WELDING | Manual |
| | ONLY BIG WELDING MACHINE | 1200+1200 watt |



| CODE | DESCRIPTION | CAPACITY |
|---|---|---|
| | ONLY WELDING MACHINE | 650+850 watt |
| | ONLY WELDING MACHINE | 850 watt |



| CODE | DESCRIPTION | CAPACITY |
|---|---|---|
| | ONLY BIG WELDING MACHINE | 1000+1000 watt |



| CODE | DESCRIPTION | CAPACITY |
|---|---|---|
| | RATCHETING PIPE CUTTER (NEW MODEL) | 16-42 MM |



| CODE | DESCRIPTION | CAPACITY |
|---|---|---|
| | PLASTIC PIPE CUTTER | UP to 75 MM |





| CODE | DESCRIPTION | SIZE |
|---|---|---|
| WS-16 | WELDING SOCKET | 16 MM |
| WS-20 | WELDING SOCKET | 20 MM |
| WS-25 | WELDING SOCKET | 25 MM |
| WS-32 | WELDING SOCKET | 32MM |
| WS-40 | WELDING SOCKET | 40 MM |
| WS-50 | WELDING SOCKET | 50 MM |
| WS-63 | WELDING SOCKET | 63 MM |
| WS-75 | WELDING SOCKET | 75 MM |
| WS-90 | WELDING SOCKET | 90 MM |
| WS-110 | WELDING SOCKET | 110 MM |
| WS-125 | WELDING SOCKET | 125 MM |
| WS-160 | WELDING SOCKET | 160 MM |



| CODE | DESCRIPTION | SIZE |
|---|---|---|
| PPS-16 | PLASTIC PIPE SHARPENER | 20-16 MM |
| PPS-20 | PLASTIC PIPE SHARPENER | 25-20 MM |
| PPS-25 | PLASTIC PIPE SHARPENER | 32-25 MM |
| PPS-32 | PLASTIC PIPE SHARPENER | 40-32 MM |
| PPS-50 | PLASTIC PIPE SHARPENER | 63-50 MM |
| PPS-75 | PLASTIC PIPE SHARPENER | 75-75 MM |
| PPS-90 | PLASTIC PIPE SHARPENER | 90-75 MM |
| PPS-110 | PLASTIC PIPE SHARPENER | 110 MM |



| CODE | DESCRIPTION | CAPACITY |
|---|---|---|
| | PLASTIC PIPE CUTTER | 50 TO125MM |



| CODE | DESCRIPTION | CAPACITY |
|---|---|---|
| | MANUEL TEST PRESSURE PUMP | 0-60 Bar |

# ON SITE STORAGE AND HANDLING

## Handling Tips

Thanks to the material properties of polypropylene, the pipes and fittings can be stored for a long time under temperatures. The storage of pipes and fittings must be in accordance with the following conditions:

- The pipes should be supported along their full length.
- Bending of the pipes is to be avoided.
- The material becomes sensitive to impact at low temperatures and in particular at temperatures below 0°C. For this reason knocks and similar impacts are to be avoided under these conditions.
- High-polymer materials are sensitive to UV radiation. For this reason the M.P.I material should also be protected against the effects of UV radiation.

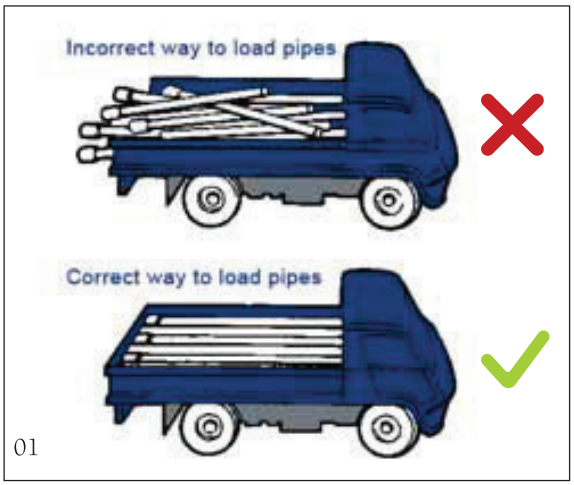


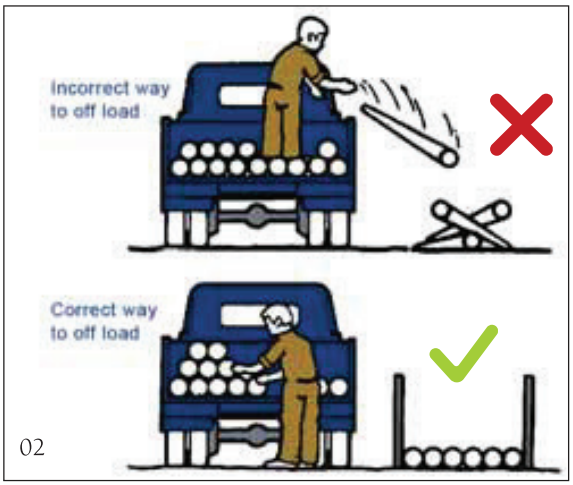


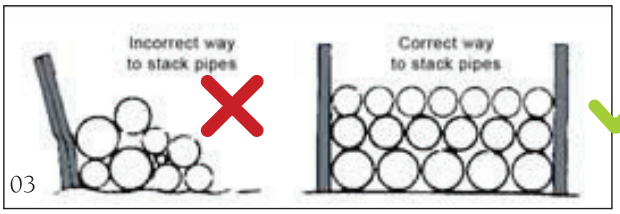


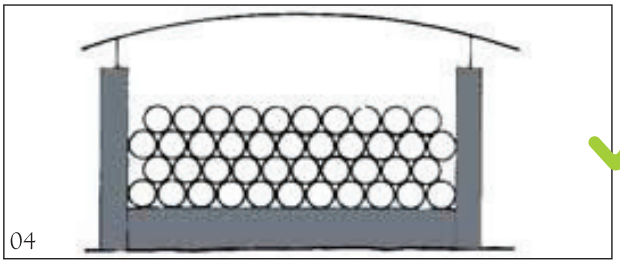

# INSTALLATION/ASSEMBLY

## Assembly Instructions

### General

Only components not damaged or contaminated, either during storage or transport, may be used for installation works.

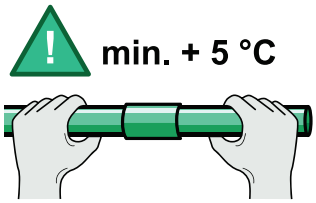


A minimum temperature level for plastic piping installation is, with regard to welding, +5 °C. At lower temperatures it is difficult to provide working conditions for high quality pipe joints.

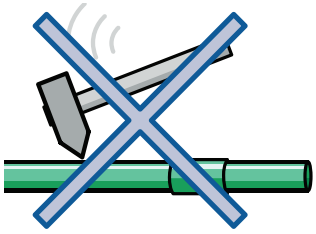

Components of plastic piping systems must be protected against damage during transport and installation.

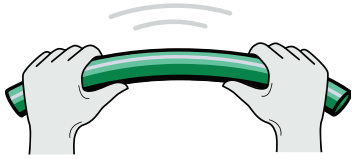

Pipe bending should be done at +15 °C. For pipes of diameter range 16 – 32 mm a minimum bending radius equals to eight diameters (D).



Components must not be exposed to naked flames.

Pipeline cross overs should be made with the use of components specially designed for this purpose.

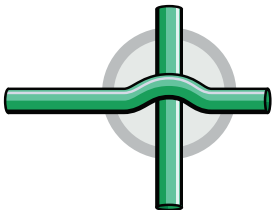

Threaded fittings must be used for screw-type joints. Threads should never be cut directly into plastic components. Threads are sealed with a special PTFE tape or sealing compounds.

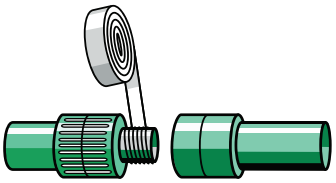

Brazing or soldering of metal fittings should not take place close to a joint between metal and plastic systems because of potential hazard of heat transfer to the fitting.

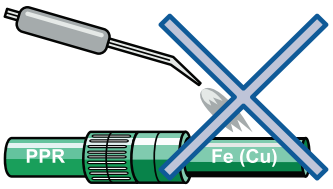


It is recommended to use plastic plugs for blanking elbows or wall mounting groups (plastic plugs are designated only for temporary use). For long term blanking has to be used plugs with metal thread.

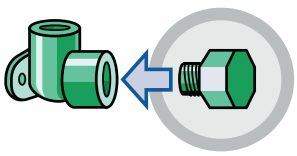

## Linear expansion and contraction

The difference of temperature during installation and under service conditions, i.e. a medium flows through the system at a different temperature to that prevailing during the installation period, results in linear changes – expansion or contraction (Δ).

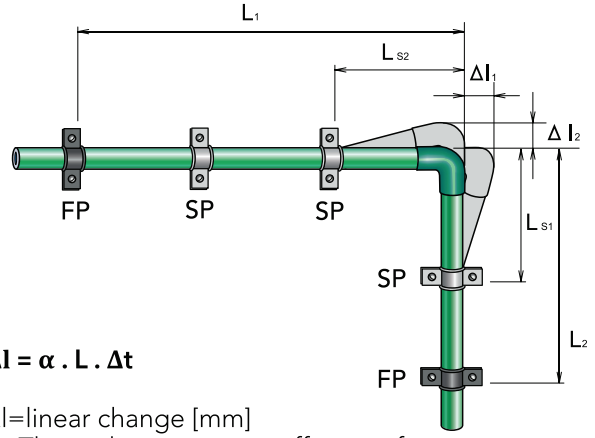


**ΔI = α . L . Δt**

ΔI=linear change [mm]
α=Thermal expansion coefficient of expansion [mm/m°C] for PPR design purposes α = 0,15 for MPI FIBER α = 0,05
L=Design distance of fixed points in the line) [m]
Δt=installation and service temperature difference[°C]

$Ls = k . \sqrt{(D . \Delta l)}$ [mm]

Ls = Compensating length [mm]
k = Material constant, for PPR k = 20
D = Pipe outside diameter [mm]
ΔI = linear change [mm]

If pipeline linear changes are not compensated in a suitable way, i.e. if the pipes can not contract and expand, additional thrust and tensile forces are concentrated in the pipes shortening their service life.

Expansion U-bend

Lk = 2 . ΔI + 150 [mm] and also Lk ≥10.D

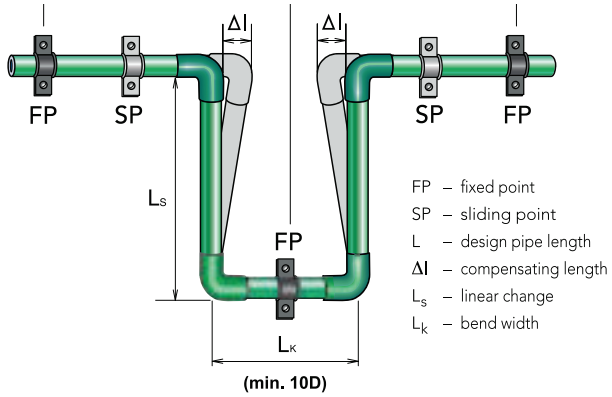


In polypropylene applications material flexibility is used for linear compensations. Pipe bends are also used for these purposes. A suitable compensation technique is the one where the pipeline is deflected perpendicularly to the original route and a free compensating length (marked as Ls) is left at the normal line.The value of Ls compensating length will depend on calculated route extension (shortening), pipe material and diameter.

## Table of compensation pipe

| pipe diametr (mm) | distances of all fixed L-points (m) | |
|---|---|---|
| | Fiber & Fiber CT | PP-R |
| 16 | 24 | 8 |
| 20 | 27 | 9 |
| 25 | 30 | 10 |
| 32 | 36 | 12 |
| 40 | 42 | 14 |

Compensation pipe

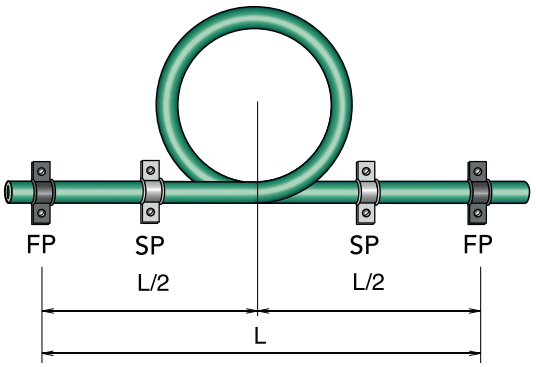


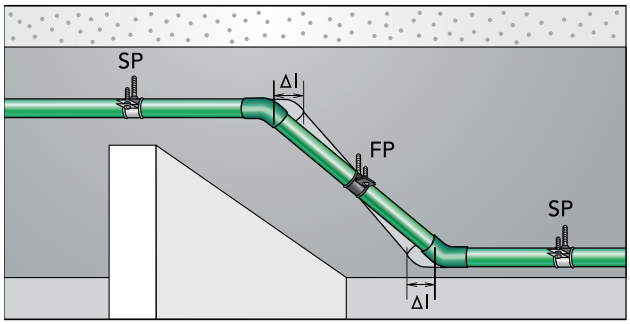


Example of compensations by change of path

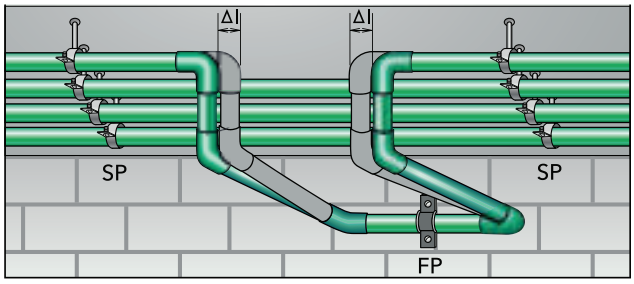


By changing the height of the pipeline.

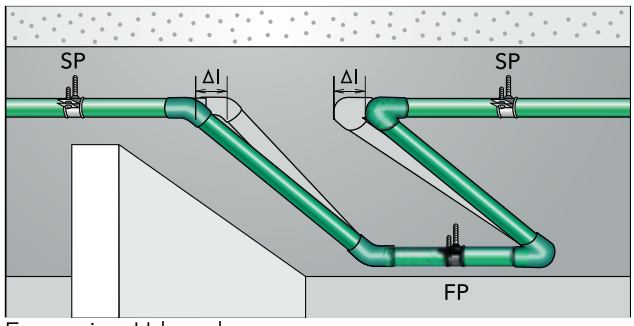


Expansion U-bend

**Examples given for M.P.I. PPR piping**

**1) Data input:**

| parameter | symbol | value | unit |
|---|---|---|---|
| linear change | ΔI | ? | mm |
| thermal expansion coefficient | α | 0,15 | mm/m °C |
| pipe lenght | L | 10 | m |
| operating temperature inside the pipe | $t_p$ | 60 | °C |
| temperature at installation | $t_m$ | 20 | °C |
| difference between operating and installation temperature levels ($\Delta t = t_p - t_m$) | Δt | 40 | °C |

**Solution:** $\Delta I = \alpha \,.\, L \,.\, \Delta t$ [mm]

$\Delta I = 0{,}15 \,.\, 10 \,.\, 40 =$ **60 mm**

**2) Data input:**

| parameter | symbol | value | unit |
|---|---|---|---|
| compensating lenght | ΔI | ? | mm |
| PPR material constant | k | 20 | - |
| external pipe diametr | D | 40 | mm |
| linear change as calculated above | ΔI | 60 | mm |

**Solution:** $Ls = k \,.\, \sqrt{(D \,.\, \Delta I)}$ [mm]

$Ls = 20 \,.\, \sqrt{(40 \,.\, 60)} = 980$ mm

**3) Data input:**

| parameter | symbol | value | unit |
|---|---|---|---|
| expansion U-bend width | | | |
| external pipe diametr | D | 40 | mm |
| linear change as calculated above | ΔI | 60 | mm |

**Solution:** $Lk = 2 \,.\, \Delta I + 150$ [mm]

$Lk = 2 \,.\, 60 + 150 = 270$ mm

$Lk > 10\ D$

$270 \text{ mm} < 10 \,.\, 40 = Lk = 400$ mm

Pipe pre-stressing can be also used for the purposes of linear expansion compensation; the compensating length may be made shorter in this way. The pre-stressing orientation is opposite to the expected linear change and its value equals to about one half.

**4) Data input:**

| parameter | symbol | value | unit |
|---|---|---|---|
| compensating lenght at pre-stressing | $L_{sp}$ | ? | mm |
| PPR material constant | k | 20 | - |
| external pipe diametr | D | 40 | mm |
| linear change as calculated above | ΔI | 60 | mm |

**Solution:** $Lsp = k \,.\, \sqrt{(D \,.\, I/2)}$ [mm]

$Lsp = 20 \,.\, \sqrt{(40 \,.\, 30)} = 693$ mm

The calculated free length (Lsp) is assumed lenght without any sustaining or suspending elements (within this length).
obstructing the expansion. The free length (Lsp) should not exceed max. spacing distance between supporting elements corresponding to the pipe diameter and media temperature.

## Diagram & Chart to Establish the Temp-dependant Liner Expansion of (STD) PP-R & PP-RCT Pipes

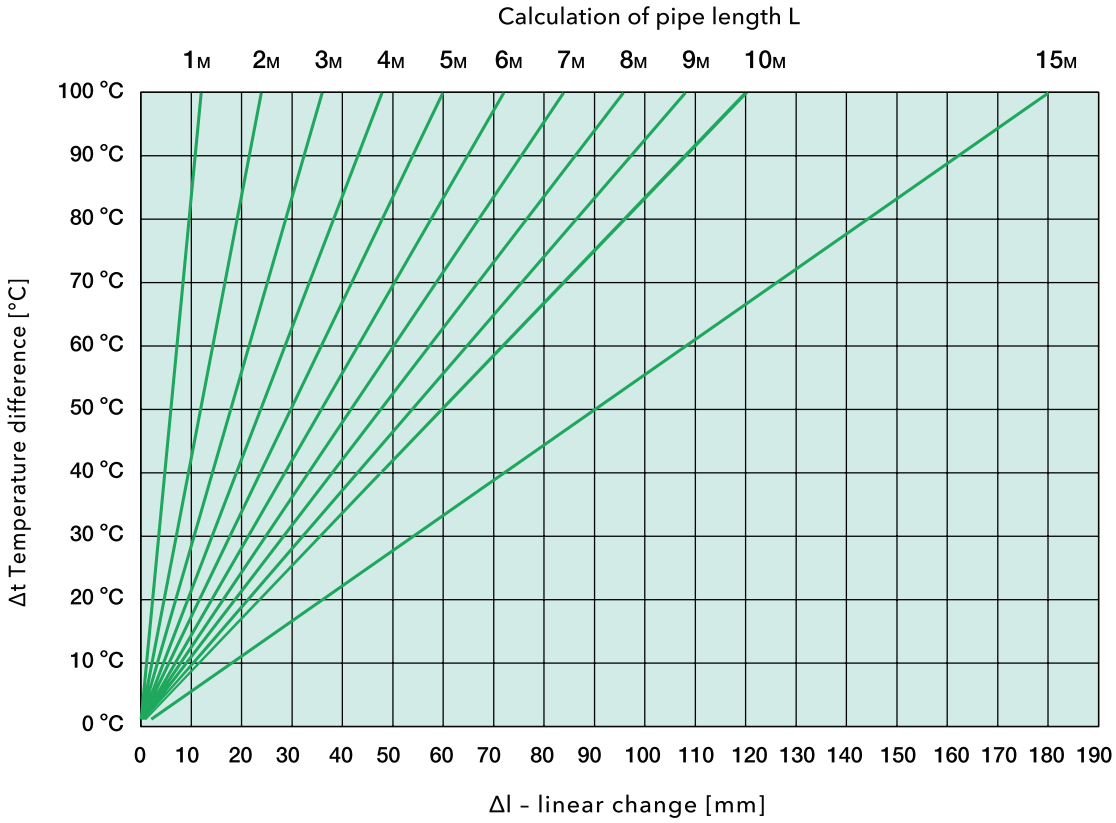


| pipe length | temperature difference Δt | | | | | | | |
|---|---|---|---|---|---|---|---|---|
| | 10 °C | 20 °C | 30 °C | 40 °C | 50 °C | 60 °C | 70 °C | 80 °C |
| | linear change Δl [mm] | | | | | | | |
| 1 m | 1.5 | 3.00 | 4.50 | 6.00 | 7.50 | 9.00 | 10.50 | 12.00 |
| 2 m | 3.00 | 6.00 | 9.00 | 12.00 | 15.00 | 18.00 | 21.00 | 24.00 |
| 3 m | 4.50 | 9.00 | 13.50 | 18.00 | 22.50 | 27.00 | 31.50 | 36.00 |
| 4 m | 6.00 | 12.00 | 18.00 | 24.00 | 30.00 | 36.00 | 42.00 | 48.00 |
| 5 m | 7.50 | 15.00 | 22.50 | 30.00 | 37.50 | 45.00 | 52.50 | 60.00 |
| 6 m | 7.00 | 18.00 | 27.00 | 37.50 | 45.00 | 54.00 | 63.00 | 72.00 |
| 7 m | 10.50 | 21.00 | 31.50 | 42.00 | 52.50 | 63.00 | 73.50 | 84.00 |
| 8 m | 12.00 | 24.00 | 36.00 | 48.00 | 60.00 | 72.00 | 84.00 | 96.00 |
| 9 m | 13.50 | 27.00 | 40.50 | 54.00 | 67.50 | 81.00 | 94.50 | 108.00 |
| 10 m | 15.00 | 30.00 | 45.00 | 60.00 | 75.00 | 90.00 | 105.00 | 120.00 |
| 15 m | 22.50 | 45.00 | 67.50 | 90.00 | 112.50 | 135.00 | 157.50 | 180.00 |

Rounded to whole numbers.

## Diagram & Chart to Establish the Temp-dependant Liner Expansion of (MULTI LAYER) PP-R & PP-RCT Pipes

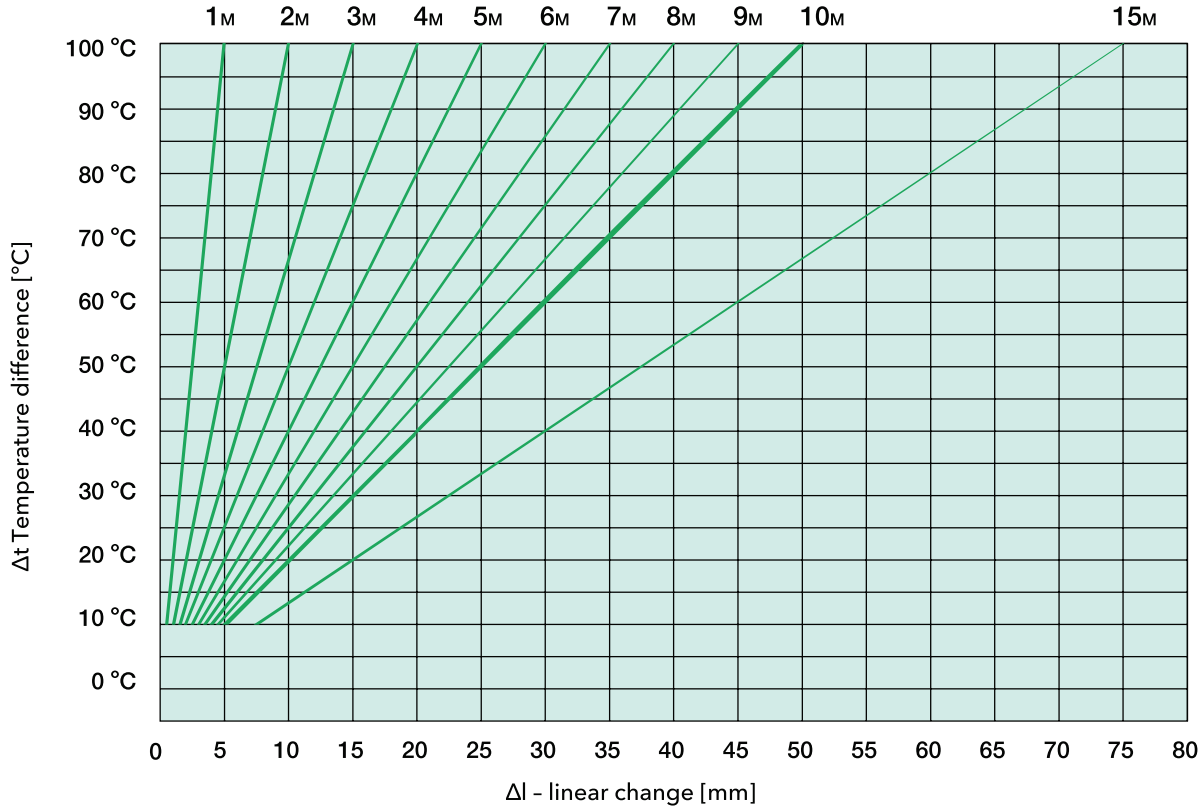


| pipe length | temperature difference Δt | | | | | | | |
|---|---|---|---|---|---|---|---|---|
| | 10 °C | 20 °C | 30 °C | 40 °C | 50 °C | 60 °C | 70 °C | 80 °C |
| | linear change Δl [mm] | | | | | | | |
| 1 m | 1 | 2 | 4 | 5 | 6 | 7 | 8 | 10 |
| 2 m | 2 | 5 | 7 | 10 | 12 | 14 | 17 | 19 |
| 3 m | 4 | 7 | 11 | 14 | 18 | 22 | 25 | 29 |
| 4 m | 5 | 10 | 14 | 19 | 24 | 29 | 34 | 38 |
| 5 m | 6 | 12 | 18 | 24 | 30 | 36 | 42 | 48 |
| 6 m | 7 | 14 | 22 | 29 | 36 | 43 | 50 | 58 |
| 7 m | 8 | 17 | 25 | 34 | 42 | 50 | 59 | 67 |
| 8 m | 10 | 19 | 29 | 38 | 48 | 58 | 67 | 77 |
| 9 m | 11 | 22 | 32 | 43 | 54 | 65 | 76 | 86 |
| 10 m | 12 | 24 | 36 | 48 | 60 | 72 | 84 | 96 |
| 15 m | 18 | 36 | 54 | 72 | 90 | 108 | 126 | 144 |

Rounded to whole numbers.

Determination of $L_s$ – compensating length

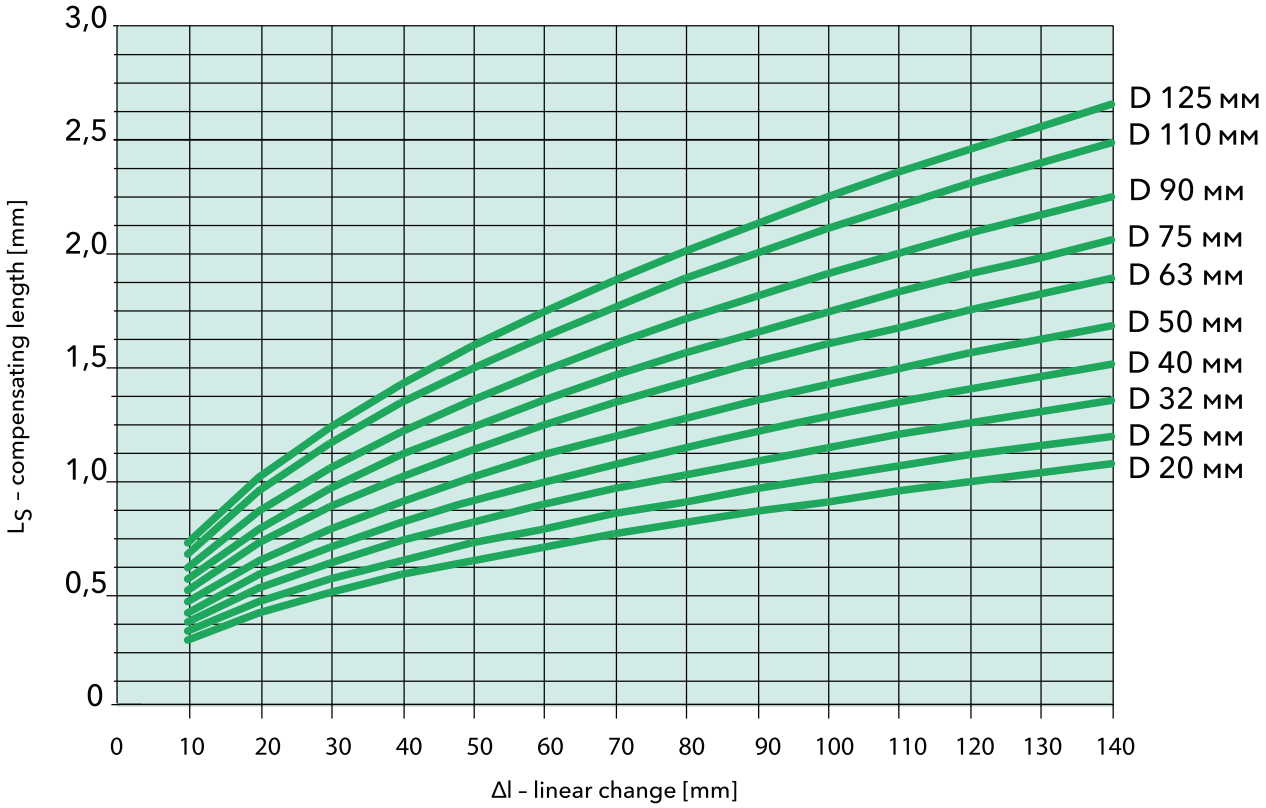


| pipe diameter [mm] | Δl – linear change [mm] | | | | | | | | | | | | | |
|---|---|---|---|---|---|---|---|---|---|---|---|---|---|---|
| | 10 | 20 | 30 | 40 | 50 | 60 | 70 | 80 | 90 | 100 | 110 | 120 | 130 | 140 |
| | Ls – compensating length [mm] | | | | | | | | | | | | | |
| 16 | 0,25 | 0,36 | 0,44 | 0,51 | 0,57 | 0,62 | 0,67 | 0,72 | 0,76 | 0,80 | 0,84 | 0,88 | 0,91 | 0,95 |
| 20 | 0,28 | 0,40 | 0,49 | 0,57 | 0,63 | 0,69 | 0,75 | 0,80 | 0,85 | 0,89 | 0,94 | 0,98 | 1,02 | 1,06 |
| 25 | 0,32 | 0,45 | 0,55 | 0,63 | 0,71 | 0,77 | 0,84 | 0,89 | 0,95 | 1,00 | 1,05 | 1,10 | 1,14 | 1,18 |
| 32 | 0,36 | 0,51 | 0,62 | 0,72 | 0,80 | 0,88 | 0,95 | 1,01 | 1,07 | 1,13 | 1,17 | 1,24 | 1,29 | 1,34 |
| 40 | 0,40 | 0,57 | 0,69 | 0,80 | 0,89 | 0,98 | 1,06 | 1,13 | 1,20 | 1,26 | 1,33 | 1,39 | 1,44 | 1,5 |
| 50 | 0,45 | 0,63 | 0,77 | 0,89 | 1,00 | 1,10 | 1,18 | 1,26 | 1,34 | 1,41 | 1,48 | 1,55 | 1,61 | 1,67 |
| 63 | 0,50 | 0,71 | 0,87 | 1,00 | 1,12 | 1,23 | 1,33 | 1,42 | 1,50 | 1,59 | 1,66 | 1,74 | 1,81 | 1,88 |
| 75 | 0,55 | 0,77 | 0,95 | 1,10 | 1,22 | 1,34 | 1,45 | 1,55 | 1,64 | 1,73 | 1,82 | 1,90 | 1,97 | 2,05 |
| 90 | 0,60 | 0,85 | 1,04 | 1,20 | 1,34 | 1,47 | 1,59 | 1,70 | 1,80 | 1,90 | 1,99 | 2,08 | 2,16 | 2,24 |
| 110 | 0,66 | 0,94 | 1,15 | 1,33 | 1,48 | 1,62 | 1,75 | 1,88 | 1,99 | 2,10 | 2,20 | 2,30 | 2,39 | 2,48 |
| 125 | 0,71 | 1,00 | 1,22 | 1,41 | 1,58 | 1,73 | 1,87 | 2,00 | 2,12 | 2,24 | 2,35 | 2,45 | 2,55 | 2,65 |



Maximum distances of supports of pipeline MPI PPR (PN 10) pipe (horizontal pipeline)

| Ø pipe [mm] | spacing distances in [cm] at temperature of | | | | | |
|---|---|---|---|---|---|---|
| | 20 °C | 30 °C | 40 °C | 50 °C | 60 °C | 80 °C |
| 16 | 90 | 85 | 85 | 80 | 80 | 65 |
| 20 | 95 | 90 | 85 | 85 | 80 | 70 |
| 25 | 100 | 100 | 100 | 95 | 90 | 85 |
| 32 | 120 | 115 | 115 | 110 | 100 | 90 |
| 40 | 130 | 130 | 125 | 120 | 115 | 100 |
| 50 | 150 | 150 | 140 | 130 | 125 | 110 |
| 63 | 170 | 160 | 155 | 150 | 145 | 125 |
| 75 | 185 | 180 | 175 | 160 | 155 | 140 |
| 90 | 200 | 200 | 185 | 180 | 175 | 150 |
| 110 | 220 | 215 | 210 | 195 | 190 | 165 |
| 125 | 235 | 230 | 225 | 210 | 200 | 170 |

Maximum spacing distances MULTI LAYER pipes (independently of water temperature)

| Ø pipe [mm] | spacing distances in [cm] at temperature of |
|---|---|
| 16 | PPR FIBER MULTI LAYER |
| 20 | 80 |
| 25 | 100 |
| 32 | 110 |
| 40 | 120 |
| 50 | 130 |
| 63 | 150 |
| 75 | 145 |
| 90 | 155 |
| 110 | 160 |
| 125 | 165 |

Maximum distances of supports of pipeline MPI PPR (PN 16) pipe (horizontal pipeline)

| Ø pipe [mm] | spacing distances in [cm] at temperature of | | | | | |
|---|---|---|---|---|---|---|
| | 20 °C | 30 °C | 40 °C | 50 °C | 60 °C | 80 °C |
| 16 | 80 | 75 | 75 | 70 | 70 | 60 |
| 20 | 90 | 80 | 80 | 80 | 70 | 65 |
| 25 | 95 | 95 | 95 | 90 | 80 | 75 |
| 32 | 110 | 105 | 105 | 100 | 95 | 80 |
| 40 | 120 | 120 | 115 | 105 | 100 | 95 |
| 50 | 135 | 130 | 125 | 120 | 115 | 100 |
| 63 | 155 | 150 | 145 | 135 | 130 | 115 |
| 75 | 170 | 165 | 160 | 150 | 145 | 125 |
| 90 | 180 | 180 | 170 | 165 | 160 | 135 |
| 110 | 200 | 195 | 190 | 180 | 175 | 155 |
| 125 | 220 | 215 | 200 | 195 | 190 | 165 |

## Pipe fixing

The pipeline route design must respect distribution system material – i.e. its thermal coefficient of expansion in the first place, necessity to allow for expansion, given operating conditions (a combination of pressure and temperature levels) and a type of pipe joints. The fixing of distribution systems is performed so that fixed and slidably mounted points are recognised when expected linear changes of pipes are considered.

## Pipe fixing techniques

Two kinds of supports are being recognised from the point of view of pipe fixing

### Fixed points (FP):

This is a type of fixing where no allowance for pipe expansion is made, i.e. the pipe can not move along its axis in the place of support (it can not slide).

### Sliding point (SP):

This is a type of fixing where the pipe is not allowed to move sideways but expansion movements are not restricted (elongation, shrinkage). Slidable mounting can be designed as follows.

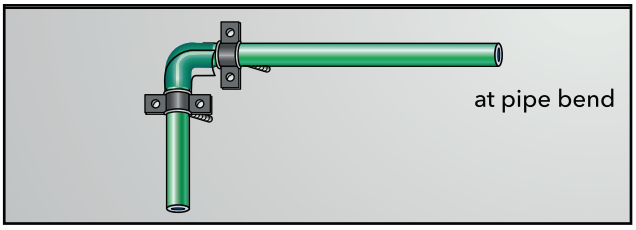


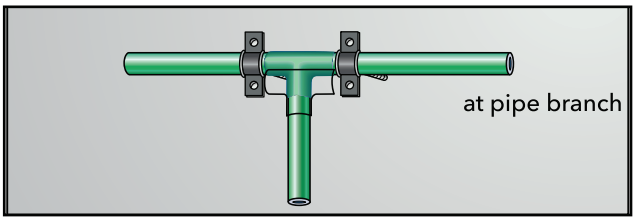


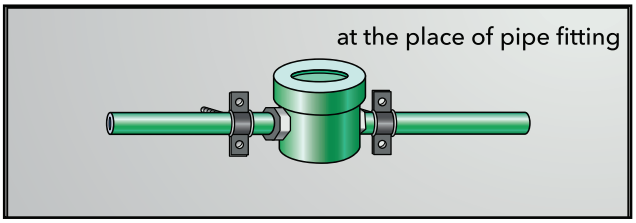


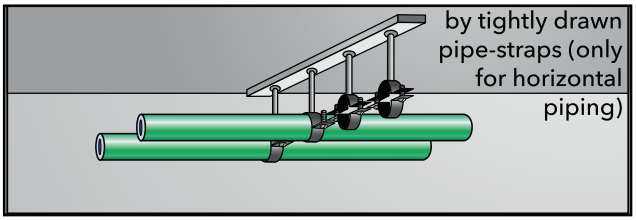


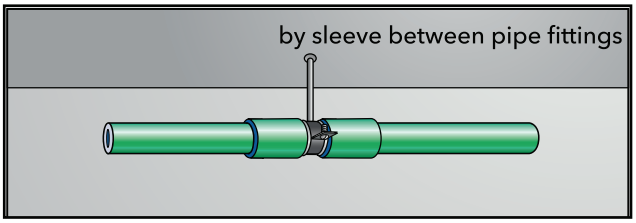


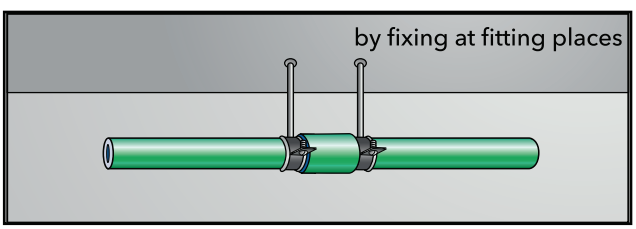


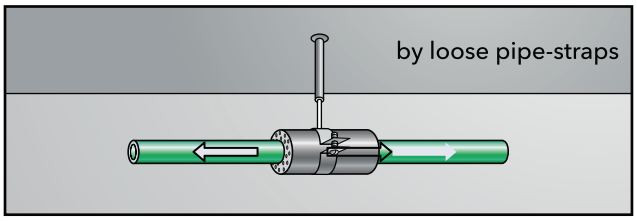


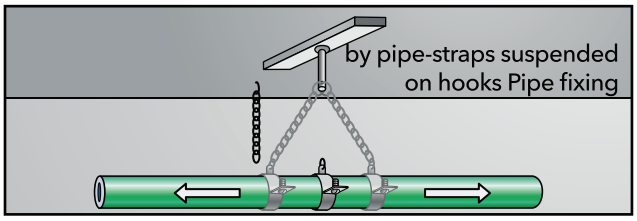


## Routing of M.P.I. PPR riser piping

In the case of riser piping it is necessary to consider precisely the layout of fixed points and sliding mounts

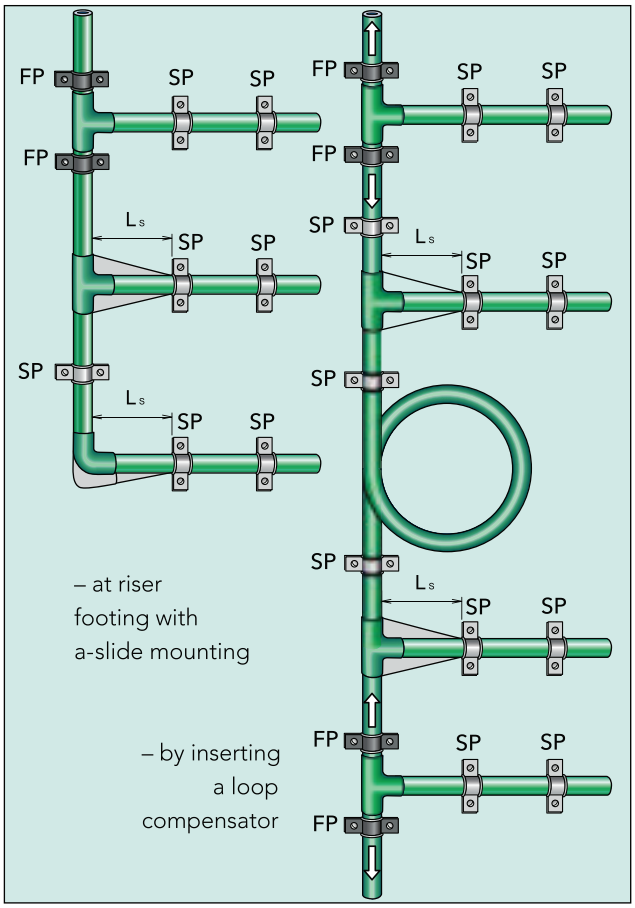

as well as creation of a suitable expansion compensation system. The adjustments for expansion in riser piping systems are provided as follows:
If it is necessary to divide the riser into several expansion sections then it can be achieved by placing fixed points.
The riser fixed points are always fixed under and over T-pieces at a branch pipe or socket which, at the same time, prevents the riser to fall. The pipe expansion must accounted for between these fixed points as follows:

In branching off feeder piping it is necessary to allow for the riser expansion by:

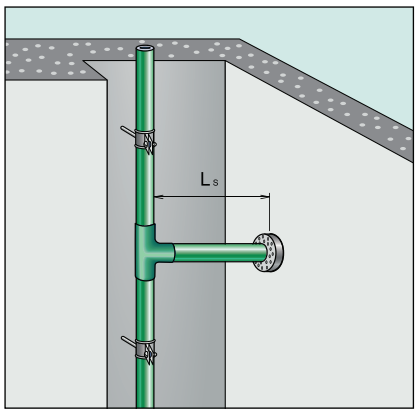


- Keeping a sufficient distance from the wall pass-through point.

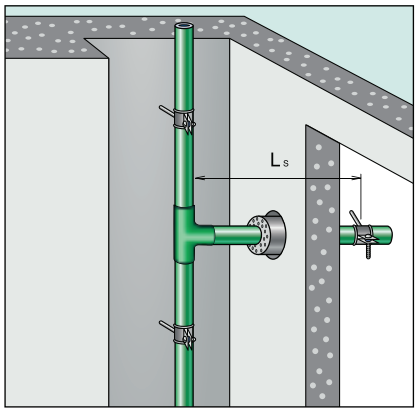


- Creating a possibility of branch pipe movement in the wall pass-through point.

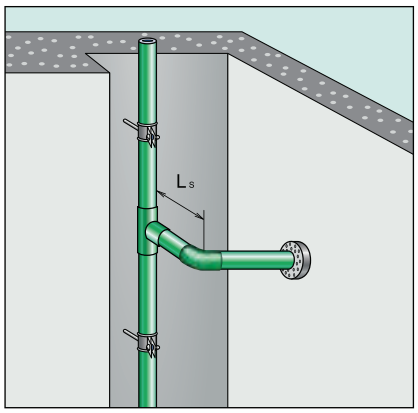


- Creating a compensating length allowing for an expansion at the riser normal line

## Routing of horizontal MPI PP-R piping

It is necessary, in horizontal piping systems, to respect precisely expansion conditions and solve how allow for them and lay the piping correctly.
The most common routing is in galvanised metal or plastic troughs, in clamps or in-wall channels (this one must be kept free).
The compensation for expansion is performed, most commonly, by a change in the routing or by the use of expansion U-bends but a use of a pipe compensation is also possible.

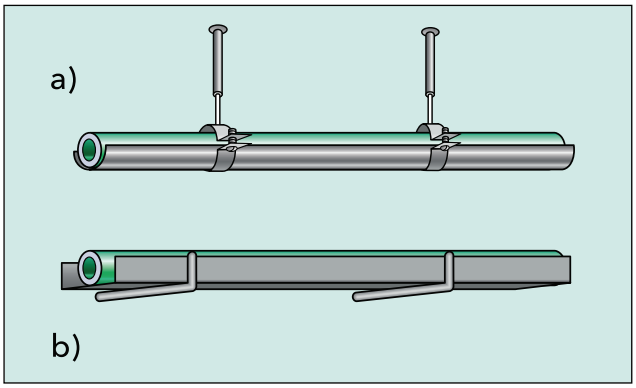


The expansion adjustment may be designed both in perpendicular and parallel plane to the ceiling structures. In option a) a pipe is insulated .
including the through on-the-spot, while in option b) an insulated pipe is laid into the trough.

# WELDING

**MPI** welding is performed according to the below guidelines. In this process, pipes and fittings are welded overlapping. The end of the pipes and fittings are heated using a welding device and subsequently connected.

**MPI** Welding devices and tools

- Make sure that the welding tools lie flat against the heating element.
- Do not use pliers or other unsuitable tools so as not to damage the coating of the welding tools.
- The required welding temperature for processing the MPI-PPR system is 260°C.
- Warning: The first welding should not be done until five minutes after welding temperature has been reached.
- MPI welding devices and tools are to be protected from impurities.
- Burned-on particles can lead to incorrect welding connections.
- Tools may be cleaned with non-fibrous, coarse paper towels.
- The welding tools must always be kept dry. If necessary, dry them with a clean, non-fibrous cloth.
- Damaged and soiled welding tools must be replaced, since only clean, properly functioning tools can produce clean and proper connections.

## Guidelines

Processing Information

| Minimum times for socket welding of PP pipeline segments at an outdoor temperature of °20C and moderate air movement | | | | |
|---|---|---|---|---|
| In the case of outdoor temperatures of under °5C, heat-up times must be doubled. | | | | |
| 1 | 2 | 3 | 4 | 5 |
| Outside pipe diameter mm | Insertion depths mm | Heating period s | Processing period s | Cooling period min |
| 16<br>20<br>25 | 13<br>14<br>15 | 6<br>6<br>9 | 4 | 2 |
| 32<br>40<br>50 | 16,5<br>18<br>20 | 10<br>15<br>23 | 6 | 4 |
| 63 | 24 | 28 | 8 | 6 |
| 75<br>90 | 26<br>32 | 35<br>46 | 10<br>10 | 8<br>8 |

# WELDING TIPS

## The following points should be observed:

- The welding device should be equipped with the appropriate welding tools. (Welding bushes and core rods have a high-quality Teflon coating. In order to avoid damaging the Teflon coating, never use pliers or similar tools for assembly. Please use a screwdriver or hexagon socket wrench.
- Switch on the welding device.
- Check welding temperature before starting to weld. Check the temperature once again before welding.
- The ends of the pipes must be cut clean and even. Pipe, fittings and welding tools must be clean and checked before welding for impurities. If necessary, clean them with a non-fibrous paper towel or a clean cloth.
- Fitting and pipe must be inserted quickly and axially, without twisting, into the corresponding welding tools The parts to be welded are then heated.
- After the required heating time, fitting and pipe are to be removed quickly from the heating element and connected immediately by pushing together without twisting until insertion depth or markings have been reached.
- The setting time of the joint corresponds to the heating period. Only after the cooling period may pressure be put on the welded connection.
- If necessary, clean the welding bushes





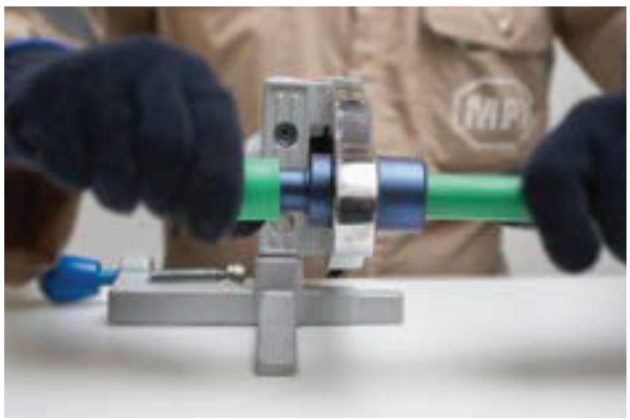

## Chemical Resistances

**Definitions, symbols and abbreviations**
The criteria of classification, definitions, symbols and abbreviations adopted in this document are as follows:

S = Satisfactory
The chemical resistance of polypropylene exposed to the action of a fluid is classified as 'satisfactory' when the results of test are acknowledged to be 'satisfactory' by the majority of the countries participating in the evaluation.

L = Limited
The chemical resistance of polypropylene exposed to the action of a fluid is classified as 'limited' when the results of tests are acknowledged to be 'limited' by the majority of the countries participating in the evaluation.
Also classified as 'limited' is the resistance to the action of chemical fluids for which judgements 'S' and 'NS' or 'L' are pronounced to an equal extent.

NS = Not satisfactory
The chemical resistance of polypropylene exposed to the action of a fluid is classified as 'not satisfactory' when the results of tests are acknowledged to be 'not satisfactory' by the majority of the countries participating in the evaluation.

Also classified as 'not satisfactory' are materials for which judgements 'L' and 'NS' are pronounced to an equal extent.

Sat. sol Satured aqueous solution, prepared at 20°C
Sol Aqueous solution at a concentration higher than 10%, but not saturated
Dil.sol Dilute aqueous solution at a concentration equal to or lower than 10%
Work.sol Aqueous solution having the usual concentration for industrial use

Solution concentrations reported in the text are expressed as a percentage by mass. The aqueous solutions of sparingly soluble chemicals are considered, as far as chemical action towards polypropylene is concerned, as saturated solutions. In general, common chemical names are used in this document.

The evaluation of chemical resistance of polypropylene) is based on PP not subjected to mechanical stress. Polypropylene subjected to mechanical stress may behave different and show
different result.

| Chemical or product | Concentration | Temperature °C 20 | 60 | 100 |
|---|---|---|---|---|
| Acetic acid | Up to 40 % | S | S | - |
| Acetic acid | 50 % | S | S | - |
| Acetic acid, glacial | Greater Than 96 % | S | L | NS |
| Acetic anhydride | 100 % | S | - | - |
| Acetone | 100 % | S | S | - |
| Aceptophenone | 100 % | S | L | - |
| Acylonitrite | 100 % | S | - | - |
| Air | | S | S | S |
| Almind oil | | S | - | - |
| Alum | Sol | S | - | - |
| Ammonia, aqueous | Up to 30 % | S | - | - |
| Ammonia, dry gas | 100 % | S | - | - |
| Ammonia, liquid | 100 % | S | - | - |
| Ammonium acetate | Satsol | S | S | - |
| Ammonium chloride | Satsol | S | - | - |
| Ammonium fluoride | Sol | S | S | - |
| Ammonium hydrogen carbonate | Satsol | S | S | - |
| Ammonium hydroxid | Satsol | S | - | - |
| Ammonium metaphosphate | Satsol | S | S | - |
| Ammonium nitrate | Satsol | S | S | S |
| Ammonium phosphate | Satsol | S | - | - |
| Ammonium sulphate | Satsol | S | S | S |
| Amyl acetate | 100 % | L | - | - |
| Amyl alcohol | 100 % | S | S | S |
| Aniline | 100 % | S | S | - |
| Apple juice | | S | - | - |
| Aqua regia | HCl/$HNO_3$=3/1 | NS | NS | NS |
| Barium carbonate | Satsol | S | S | S |
| Barium chloride | Satsol | S | S | S |
| Barium hydroxide | Satsol | S | S | S |
| Barium sulphate | Satsol | S | S | S |
| Benzene | 100 % | L | NS | NS |
| Benzoic acid | Satsol | S | - | - |
| Bemzyl alcohol | 100 % | S | L | - |
| Borax | Sol | S | S | - |
| Boric acid | Satsol | S | - | - |
| Bromine, gas | | L | NS | NS |
| Bromine, liquid | 100 % | NS | NS | NS |

| Chemical or product | Concentration | Temperature °C 20 | 60 | 100 |
|---|---|---|---|---|
| Butane | 100 % | S | - | - |
| Butanol | 100 % | S | L | L |
| Butyl acetate | 100 % | S | L | L |
| Butyl glycol | 100 % | S | - | - |
| Butyl phenol | Cold satsol | S | - | - |
| Butyl phthalate | 100 % | S | L | L |
| Calcium carbonate | Satsol | S | S | S |
| Calcium chloride | Satsol | S | S | S |
| Calcium hydroxide | Satsol | S | S | - |
| Calcium hypochiorite | Sol | S | - | - |
| Calcium nitrate | Satsol | S | S | - |
| Camphor oil | | NS | NS | NS |
| Carbon dioxide, dry gas | 100 % | S | S | - |
| Carbon dioxide, wet | | S | S | - |
| Carbon disulphide | 100 % | S | NS | NS |
| Carbon tetrachioride | 100 % | NS | NS | NS |
| Castor oil | 100 % | S | S | - |
| Caustic soda | Up to 50 % | S | L | L |
| Chlorine, aqueous | Satsol | S | L | - |
| Chlorine, dry gas | 100 % | NS | NS | NS |
| Chlorine, liquid | 100 % | NS | NS | NS |
| Cloroacetic acid | Sol | S | - | - |
| Chloroethanol | 100 % | S | - | - |
| Chloroform | 100 % | L | NS | NS |
| Chlorosulphonic acid | 100 % | NS | NS | NS |
| Chrome alum | Sol | S | S | - |
| Chromic acid | Up to 40 % | S | L | N |
| Citric acid | 10 % | S | S | S |
| Coconut oil | | S | - | - |
| Corn oil | | S | L | - |
| Cottonseed oil | | S | S | - |
| Cresol | Greater Than 90 % | S | - | - |
| Copper (II) Chloride | Satsol | S | S | - |
| Copper (II) nitrate | 30 % | S | S | S |
| Copper (II) sulphate | Satsol | S | S | - |
| Cyclohexane | 100 % | S | - | - |
| Cyclohexanol | 100 % | S | L | - |
| Cyclohexanone | 100 % | L | NS | NS |



| Chemical or product | Concentration | Temperature °C 20 | 60 | 100 |
|---|---|---|---|---|
| Dakalin (decahydro-naphthalene) | 100 % | NS | NS | NS |
| Dextrin | Sol | S | S | - |
| Dextrose | Sol | S | S | - |
| Dibutyl phthalate | 100 % | S | L | NS |
| Dichloroacetic acid | 100 % | L | - | - |
| Dichloroethylene (A und B) | 100 % | L | - | - |
| Diethanolamine | 100 % | S | - | - |
| Diethyl ether | 100 % | S | L | - |
| Diethylone glycol | 100 % | S | S | - |
| Diglycolic acid | Satsol | S | - | - |
| Disooctyl phthalate | 100 % | S | L | - |
| Disooctyl amine | 100 % | S | - | - |
| Disooctyl formamide | 100 % | S | S | - |
| Dioctyl phthalate | 100 % | L | L | - |
| Dioxane | 100 % | L | L | - |
| Distilled water | 100 % | S | S | S |
| Ethanolamine | 100 % | S | - | - |
| Ethyl acetate | 100 % | L | NS | NS |
| Ethyl alcohol | Up to 95 % | S | S | S |
| Ethyl chloride | 100 % | NS | NS | NS |
| Ethylene chloride (mono and di) | | L | L | - |
| Ethylene glycol | 100 % | S | S | S |
| Formaldehyde | 40 % | S | - | - |
| Formic acid | 10 % | S | S | L |
| Formic acid | 85 % | S | NS | NS |
| Formic acid, anhydrous | 100 % | S | L | L |
| Fructose | Sol | S | S | S |
| Fruit juice | | S | S | S |
| Gasoline, petrol (aliphatic hydrocarbons) | | NS | NS | NS |
| Gelatine | | S | S | - |
| Glucose | 20 % | S | S | S |
| Glycerine | 100 % | S | S | S |
| Glycolic acid | 30 % | S | - | - |
| Heptane | 100 % | L | NS | NS |
| Hexane | 100 % | S | L | - |
| Hydrobromic acid | Up to 48 % | S | - | |
| Hydrochloric acid | From 2 to 7 % | S | S | S |
| Hydrochloric acid | From 10 to 20 % | S | S | - |
| Hydrochloric acid | 30 % | S | L | L |
| Hydrochloric acid | From 35 to 36 % | S | - | - |
| Hydrofluoric acid | Dilsol | S | - | - |
| Hydrofluoric acid | 40 % | S | - | - |
| Hydrogen | 100 % | S | - | - |
| Hydrogen chloride, dry gas | 100 % | S | S | - |
| Hydrogen peroxide | Up to 10 % | S | - | - |
| Hydrogen peroxide | Up to 30 % | S | L | - |
| Hydrogen sulphide, dry gas | 100 % | S | S | - |
| Iodune in alcohol | | S | - | - |
| Isopropyl alcohol | 100 % | S | S | S |
| Isopropyl ether | 100 % | L | - | - |
| Isoctane | 100 % | L | NS | NS |
| Lactic acid | Up to 90 % | S | S | - |
| Lanoline | | S | L | - |
| Linseed oil | | S | S | S |
| Megnecium carbonate | Satsol | S | S | S |
| Megnecium chloride | Satsol | S | S | - |
| Megnesium sulphate | Satsol | S | S | - |
| Malic acid | Sol | S | S | - |
| Mercury (II) chloride | Satsol | S | S | - |
| Mercury (II) cyanide | Satsol | S | S | - |
| Mercury (II) nitrate | Sol | S | S | - |
| Mercury | 100 % | S | S | - |
| Methyl acetate | 100 % | S | S | - |
| Methyl alcohol | 5 % | S | L | L |
| Methyl amine | Up to 32 % | S | - | - |
| Methyl bromide | 100 % | NS | NS | NS |
| Methyl ether ketone | 100 % | S | - | - |
| Methylene chloride | 100 % | L | NS | NS |
| Milk | | S | S | S |
| Monochloroacetic acid | Greater Than 85 % | S | S | - |
| Naphtha | | S | NS | NS |
| Nickel chloride | Satsol | S | S | - |
| Nickel nitrate | Satsol | S | S | - |
| Nickel sulphate | Satsol | S | S | - |
| Nitric acid | 10 % | S | NS | NS |
| Nitric acid | 30 % | S | - | - |
| Nitric acid | From 40 to 50 % | L | NS | NS |
| Nitric acid, fujming (with nitrogen dioxide) | | NS | NS | NS |
| Nitrobenzene | 100 % | S | L | - |
| Oleic acid | 100 % | S | L | - |
| Oleum (sulphuric acid with 60 % of $SO_3$) | | NS | NS | NS |
| Olive oil | | S | S | L |
| Oxalic acid | Satsol | S | L | NS |
| Oxygen | 100 % | S | - | - |

| Chemical or product | Concentration | Temperature °C 20 | 60 | 100 |
|---|---|---|---|---|
| Paraffin oil (FL 65) | | S | L | NS |
| Peanut oil | | S | S | - |
| Peppemint oil | | S | - | - |
| Perchloric acid | 2N | S | - | - |
| Petroleum ether (ligroinel) | | L | L | - |
| Phenol | 5 % | S | S | - |
| Phenol | 90 % | S | - | - |
| Phosphoric acid | 25 % | S | S | S |
| Phosphoric acid | From 25 to 85 % | S | S | S |
| Phosphoric oxychloride | 100 % | L | - | - |
| Picric acid | Satsol | S | - | - |
| Potassium bicarbonate | Satsol | S | S | - |
| Potassium borate | Satsol | S | S | - |
| Potassium bromate | Up to 10 % | S | S | - |
| Potassium brominde | Satsol | S | S | - |
| Potassium carbonate | Satsol | S | - | - |
| Potassium chlorate | Satsol | S | S | - |
| Potassium chloride | Satsol | S | - | - |
| Potassium chromate | Satsol | S | S | - |
| Potassium syanide | Sol | S | - | - |
| Potassium fluoride | Satsol | S | S | |
| Potassium hydroxide | Up to 50 % | S | S | S |
| Potassium iodide | Satsol | S | - | - |
| Potassium nitrate | Satsol | S | S | - |
| Potassium perchlorate | 10 % | S | S | - |
| Potassium pemanganate | 2 % | S | - | - |
| Potassium persulphate | Satsol | S | - | - |
| Potassium sulphate | Satsol | S | - | - |
| Propane | 100 % | S | - | - |
| Propionic acid | Greater Than 50 % | S | - | - |
| Pyridne | 100 % | L | - | - |
| Sea water | | S | S | S |
| Sillicone oil | | S | S | S |
| Silver nitrate | Satsol | S | S | L |
| Sodium acetate | Satsol | S | S | S |
| Sodium benzoate | 35 % | S | - | - |
| Sodium carbonate | Up to 50 % | S | S | L |
| Sodium chlorate | Satsol | S | - | - |
| Sodium chloride | Satsol | S | S | S |
| Sodium chlorite | 2 % | S | L | NS |
| Sodium chlorite | 20 % | S | L | NS |
| Sodium dichromate | Satsol | S | S | S |
| Sodium hydrogen carbonate | Satsol | S | S | S |
| Sodium hydrogen sulphate | Satsol | S | S | - |
| Sodium hydrogen sulphite | Sol | S | - | - |
| Sodium hydroxide | 1 % | S | S | S |
| Sodium hydroxide | From 10 to 60 % | S | S | S |
| Sodium hypochlorite | 5 % | S | - | - |
| Sodium hypochlorite | 10 % | S | - | - |
| Sodium hypochlorite | 20 % | S | - | - |
| Sodium metaphosphate | Sol | S | - | - |
| Sodium nitrate | Satsol | S | S | - |
| Sodium perborate | Satsol | S | - | - |
| Sodium phosphate (neutral) | Satsol | S | S | S |
| Sodium silicate | Sol | S | S | - |
| Sodium sulphate | Satsol | S | S | - |
| Sodium sulphide | Satsol | S | - | - |
| Sodium sulphite | 40 % | S | S | S |
| Sodium thiosuphate (hypo) | Satsol | S | - | - |
| Soybean oil | | S | L | - |
| Succinic acid | Satsol | S | S | - |
| Sulphur acid | Up to 10 % | S | S | S |
| Sulphur dioxide,dry or wet | 100 % | S | S | - |
| Sulphur acid | From 10 to 30 % | S | S | - |
| Sulphuric acid | 50 % | S | L | L |
| Sulphuric acid | 96 % | S | L | NS |
| Sulphuric acid | 98 % | L | NS | NS |
| Sulphurous acid | Sol | S | - | - |
| Tartaric acid | 10 % | S | S | - |
| Tetrahydrofuran | 100 % | L | NS | NS |
| Tetralin | 100 % | NS | NS | NS |
| Thiophene | 100 % | S | L | - |
| Tin (IV) chloride | Satsol | S | S | - |
| Tin (II) chloride | Satsol | S | S | - |
| Toluene | 100 % | L | NS | NS |
| Trichloroacetic acid | Up to 50 % | S | S | - |
| Trichloroethylene | 100 % | NS | NS | NS |
| Triethanolamine | Sol | S | - | - |
| Turpentine | | NS | NS | NS |
| Urea | Satsol | S | - | - |
| Vinegar | | S | S | - |
| Water brackish, mineral, potable | | S | S | S |
| Whiskey | | S | - | - |
| Wines | | S | - | - |
| Xylene | 100 % | NS | NS | NS |
| Yeast | Sol | S | S | S |
| Zinc chloride | Satsol | S | S | - |
| Zinc sulphate | Satsol | S | S | - |

Table 3.1 Chemical resistance of polypropylene, not subjected to mechanical stress, to various fluids at 60 ,20 and °100C (source: ISO/TR 10358)



bsi.

Certificate of Registration

QUALITY MANAGEMENT SYSTEM - ISO 9001:2015

This is to certify that:

Modern Plastics Industry LLC
Premise number: 5999901JS
596, Dubai Investment Park 1
Jebel Ali
PO Box 31550
Dubai
United Arab Emirates

Holds Certificate No: FM 31169

and operates a Quality Management System which complies with the requirements of ISO 9001:2015 for the following scope:

The manufacture of pipes and fittings of PVC, CPVC, PP-R, PP compression fittings, injection moulded products to company and customer required specifications.

For and on behalf of BSI:

Andrew Launn, EMEA Systems Certification Director

Original Registration Date: 1999-07-07
Latest Revision Date: 2018-08-21

Effective Date: 2018-10-30
Expiry Date: 2021-10-29

Page: 1 of 1

...making excellence a habit.



DVGW

CERT

DVGW type examination certificate

DVGW-Baumusterprüfzertifikat

DW-8317CU0284

| | |
|---|---|
| Field of Application<br>Anwendungsbereich | products of water supply<br>Produkte der Wasserversorgung |
| Owner of Certificate<br>Zertifikatinhaber | Modern Plastic Industry L.L.C.<br>Dubai Investment Park, Jebel Ali, UAE- Dubai |
| Distributor<br>Vertreiber | Modern Plastic Industry L.L.C.<br>Dubai Investment Park, Jebel Ali, UAE- Dubai |
| Product Category<br>Produktart | plastic pipes for drinking water installations: PP-R, SDR 6 (8317) |
| Product Description<br>Produktbezeichnung | Pipes made of green coloured PP-R for the drinking water installation, dimension group 2 |
| Model<br>Modell | ATLAS AND FLOWTECH |
| Test Reports<br>Prüfberichte | type testing: 130637/18 from 29.08.2019 (SKZ)<br>KTW testing: K-316820-19-Ko from 12.08.2019 (WHY)<br>hygienic testing: W-313841e-19-StKru from 05.06.2019 (WHY) |
| Test Basis<br>Prüfgrundlagen | DVGW W 544 (01.05.2007)<br>UBA KTW (07.03.2016)<br>DVGW W 270 (01.11.2007) |
| Date of Expiry / File No.<br>Ablaufdatum / Aktenzeichen | 29.08.2024 / 18-0306-WNE |

26.09.2019 GI A-1/2

DAkkS



ZERTIFIKAT

SKZ

SKZ - Testing GmbH awards the following company

**Modern Plastic Industry L.L.C.**
**Dubai Investment Park**
**P.O. Box 31550**
**31550 DUBAI**
**VEREINIGTE ARABISCHE EMIRATE**

Production site: Modern Plastic Industry L.L.C., AE-31550 Dubai

the right to use the SKZ testing and inspection mark

A 801

for the following plastic products

**Pressure pipes made of polypropylene PP-R**

Trade name: ATLAS and FLOWTECH

SKZ specification for tests and inspection **HR 3.10**

Users of the SKZ mark are obliged to observe the required regulations for the production and testing of these products.

Date of initial certification: 10. September 2019

Date of expiry: 09. September 2024

Würzburg, 10. September 2019

i.V.

Dipl.-Ing. Hans-Peter Krause
Head of Certification Body

The original language of this certificate is German. In case of doubt, the German version is obligatory.

SKZ - Testing GmbH, Friedrich-Bergius-Ring 22, 97076 Würzburg, Germany, Tel. +49 931 4104-0, testing@skz.de, www.skz.de



WRAS
APPROVED MATERIAL

Approval Number: 1810526
Test Report: M106618

Water Regulations Advisory Scheme Ltd.
Unit 13,
Willow Road,
Pen y Fan Industrial Estate,
Crumlin,
Gwent,
NP11 4EG

1st November 2018

Modern Plastic Industry LLC
Dubai Investment Park,
PO Box No. 31550,
Dubai,
United Arab Emirates

**WATER REGULATIONS ADVISORY SCHEME LTD. (WRAS)**
**MATERIAL APPROVAL**

The material referred to in this letter is suitable for contact with wholesome water for domestic purposes having met the requirements of BS6920-1:2000 and/or 2014 'Suitability of non-metallic products for use in contact with water intended for human consumption with regard to their effect on the quality of the water'.

The reference relates solely to its effect on the quality of the water with which it may come into contact and does not signify the approval of its mechanical or physical properties for any use.

**POLYPROPYLENE - COMPONENTS.** **5260**

'Flowtech & Atlas PP-R Pipe'. Green coloured, extruded PP-R pipes. For use with water up to 85°C.

**APPROVAL NUMBER: 1810526**
**APPROVAL HOLDER: MODERN PLASTIC INDUSTRY LLC**

The Scheme reserves the right to review approval.
Approval 1810526 is valid between October 2018 and October 2023

An entry, as above, will accordingly be included in the Water Fittings Directory on-line under the section headed, 'Materials which have passed full tests of effect on water quality'.

The Directory may be found at: www.wras.co.uk/directory

Yours faithfully

Jason Furnival
Approvals & Enquiries Manager
Water Regulations Advisory Scheme

The Water Regulations Advisory Scheme Ltd, Registered in England No. 3660000 Registered office: 40 Lowick Close, Hazel Grove, Stockport, SK7 5ED Tel: +44(0)333 207 9200 Fax: +44(0)845 345 1641 Email: info@wras.co.uk website: www.wras.co.uk

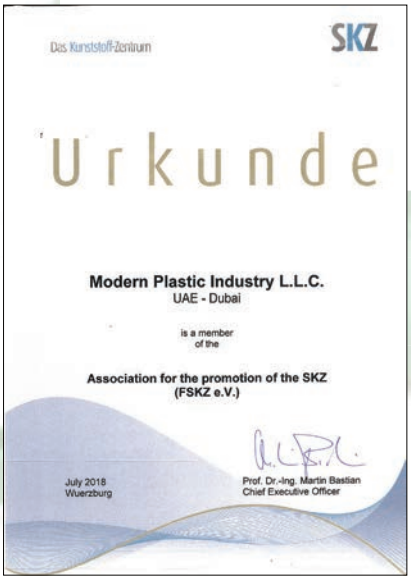

Das Kunststoff-Zentrum

SKZ

Urkunde

**Modern Plastic Industry L.L.C.**
UAE - Dubai

is a member
of the

**Association for the promotion of the SKZ**
**(FSKZ e.V.)**

July 2018
Wuerzburg

Prof. Dr.-Ing. Martin Bastian
Chief Executive Officer



Hygiene-Institut
des Ruhrgebiets

Hy

Modern Plastic Industry L.L.C.
Dubai Investment Park - 1
P.O. Box 31550
DUBAI
UNITED ARAB EMIRATES

**TEST REPORT**

**Enhancement of Microbial Growth on Materials to Come into Contact with Drinking water**
**Test pursuant to DVGW Technical Standard W 270, November 2007**

**Client:** Modern Plastic Industry L.L.C.
Dubai Investment Park - 1
P.O. Box 31550
DUBAI
UNITED ARAB EMIRATES

**Ordering date:** 15.01.2019

**Description of the material:**
Test material: **Pipes made of PP-R Virgin plastic green colour for the use of drinking water installation**

| | |
|---|---|
| Composition: | recipe submitted and checked (9239) |
| Processing instructions: | for specifications, consult the client |
| Field of application: | for specifications, consult the client |
| Quantity of material per area unit: | for specifications, consult the client |

**Test samples:**

| | |
|---|---|
| Nature and property: | 20 pieces of hard plastic pipes, green, length: 80 cm, ID: 20 mm |
| Manufacturing: | carried out by the client (description submitted) |
| Processing conditions: | carried out by the client (description submitted) |

**Date of receipt of test samples:** 21.01.2019
Storing conditions in the testing laboratory until start of test: at room temperature
This test report consists of 3 pages.

DAkkS



# WHY MPI

Proven research capability and ability to provide products to suit customer application needs.

Value pipes & fittings at a competitive price.

Technical service and installation backup.

One stop facility - wide range of pipes & fittings in UPVC (SWR Drainage), UPVC high pressure, CPVC & PP Compression and PP-R / PP-RCT.

Prompt deliveries in-house manufacturing facilities for all the pipes and fittings in UAE.

Quality - according to international standards (KITEMARK, WRAS, DVGW, SKZ, HY, KIWA)

Quality management system (ISO 9001:2015).

Operational excellence - precision manufacturing according to the standards using state of the art machinery.

Duty exemption in GCC countries.

Reliability - 24 hours customer service.


صناعة البلاستيك الحديثة (ش.ذ.م.م.)

MODERN PLASTIC INDUSTRY (L.L.C.)

(A Member of Al Shirawi Group of Companies)

ص.ب: ٣١٥٥٠، دبي – ا.ع.م، تليفون: ١٣٠٠ ٨٨٥–٤–٩٧١+، فاكس: ١٣٠١ ٨٨٥–٤–٩٧١+

P.O. Box: 31550, Dubai - U.A.E., Tel.: +971-4-8851300, Fax: +971-4-8851301

E-mail: info@mpi.ae Web Location: http://www.mpi.ae